Professional Grade Tankless and Mini-Tank Electric Water Heaters

Specification Guide | October 2026

Eemax®
evolving hot water

Learn more at **Eemax.com**
Or call 800.543.6163

Eemax Sizing Guide

Ensure Proper Size of Tankless Electric Water Heaters

To size the proper tankless electric water heater we need to know:

- Desired outlet temperature
- Inlet water temperature
- Flow rate in gallons per minute (GPM)
- Power available: voltage (VAC), phase, as well as available amperage

1. **Identify Rise in Temperature:** Found by subtracting your inlet water temperature (see below: ground water temperature chart) from your desired outlet temp OR use local water temperature data if available and accurate.

2. **Identify Heating Power Required:** Move to the Power Required Chart and find the intersection between Rise in Temperature and required Gallons per Minute flow rate (GPM). If the Power Required Chart is not applicable, use the formulas below. This will determine the kilowatts (kW) required.

3. **Choose model based on required kilowatts and voltage as well as additional options required per specific application and/or environment.**

Power Required Chart

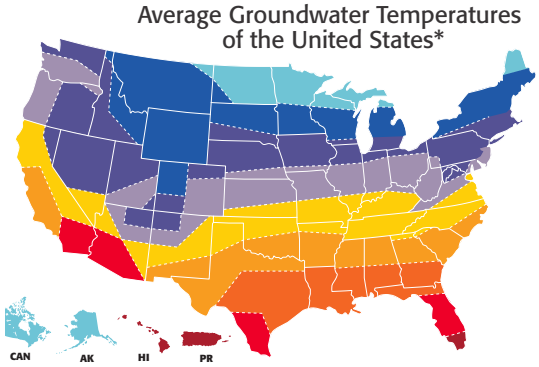

*Source: US Environmental Protection Agency

Total Gallons Per Minute (GPM) Demand	20°F	30°F	40°F	50°F	60°F	70°F	80°F	90°F	100°F	110°F
30	88 kW	132 kW								
25	74 kW	110 kW								
24	71 kW	106 kW								
23	68 kW	102 kW	135 kW							
22	65 kW	97 kW	129 kW							
21	62 kW	93 kW	123 kW							
20	59 kW	88 kW	118 kW							
19	56 kW	84 kW	112 kW	140 kW						
18	53 kW	80 kW	106 kW	132 kW						
17	50 kW	75 kW	100 kW	125 kW						
16	47 kW	71 kW	94 kW	118 kW	141 kW					
15	44 kW	66 kW	88 kW	110 kW	132 kW					
14	41 kW	62 kW	82 kW	103 kW	123 kW	144 kW				
13	39 kW	58 kW	77 kW	96 kW	115 kW	134 kW				
12	36 kW	53 kW	71 kW	88 kW	106 kW	123 kW	141 kW			
11	33 kW	49 kW	65 kW	81 kW	97 kW	113 kW	129 kW			
10	30 kW	44 kW	59 kW	74 kW	88 kW	103 kW	118 kW	132 kW		
9	27 kW	40 kW	53 kW	66 kW	80 kW	93 kW	106 kW	119 kW	132 kW	
8	24 kW	36 kW	47 kW	59 kW	71 kW	82 kW	94 kW	106 kW	118 kW	129 kW
7	21 kW	31 kW	41 kW	52 kW	62 kW	72 kW	82 kW	93 kW	103 kW	113 kW
6	18 kW	27 kW	36 kW	44 kW	53 kW	62 kW	71 kW	80 kW	88 kW	97 kW
5	15 kW	22 kW	30 kW	37 kW	44 kW	52 kW	59 kW	66 kW	74 kW	81 kW
4	12 kW	18 kW	24 kW	30 kW	36 kW	41 kW	47 kW	53 kW	59 kW	65 kW
3	9 kW	14 kW	18 kW	22 kW	27 kW	31 kW	36 kW	40 kW	44 kW	49 kW
2	6 kW	9 kW	12 kW	15 kW	18 kW	21 kW	24 kW	27 kW	30 kW	33 kW
1	3 kW	5 kW	6 kW	8 kW	9 kW	11 kW	12 kW	14 kW	15 kW	17 kW
0.5	2 kW	3 kW	3 kW	4 kW	5 kW	6 kW	6 kW	7 kW	8 kW	9 kW

Rise in Temperature °F

NOTE: For simple calculation, kW reference is based on a 100% heater efficiency.

kW Required = (GPM x Temp Rise)/6.83
Temperature Rise = (kW x 6.83) /GPM
GPM Demand = (kW x 6.83)/Temp Rise

Information and product specifications contained in this document are subject to change without notice. REV 2026

Contents

Eemax® Tankless and Mini-Tank Electric Water Heaters

About Eemax

Providing endless hot water is our business. Eemax delivers a robust portfolio of tankless electric water heaters that are designed for easy, flexible installation, are engineered with advanced capabilities, and are industry-leading when it comes to innovation. Headquartered in Atlanta, GA, Eemax has a sales presence in 30 countries worldwide through plumbing wholesale distribution channels and major retail outlets. Visit eemax.com to learn more.

While many Eemax products have sustainable features, certain products stand out as a cut above – and those earn the Sustainability Standout® seal*. Throughout this guide you will see our Sustainability Standout seal, it's given based on a number of internally designated factors relating to product attributes like energy efficiency, longevity, carbon reduction and more. This designation can help professionals recommend responsible products and consumers make smart purchasing decisions.

*Sustainability Standout is a registered trademark in the United States.

Product Family	kW Range	Voltage Range	GPM Range	Temp. Range	Page(s)
SafeAdvantage™	32 - 150kW	208V/3ph, 480V/3ph, 600V/3ph	1.0 - 30 GPM	60-90°F	**4-7**
SpecAdvantage™	32 - 150kW	208V/3ph, 480V/3ph, 600V/3ph	1.0 - 30 GPM	60-180°F	**8-10**
Three Phase™	18 - 32kW	208V/3ph, 480V/3ph	0.7 - 5 GPM	60-180°F	**11-12**
ProSeries™	8 - 36kW	240V*	0.3 - 6 GPM	80-140°F	**13-14**
Eemax Inline Flow Regulator					**15**
ProSeries XTP™	18 - 54kW	208V/3ph, 480V/3ph	0.5 - 20 GPM	60-180°F	**16-17**
Series Two™, "TC"	15 - 23kW	240V*, 208V, 277V	0.7 - 3 GPM	60-180°F	**18-19**
Series Two™, "T2"	15 - 23kW	240V*, 208V, 277V	1.5 - 4 GPM	60-180°F	**20-21**
Series Three™	28.5kW	240V*	0.7 - 5 GPM	60-180°F	**22-23**
AutoBooster™	7.2kW	240V*	0.3 - 2.5 GPM	80-140°F	**24-25**
HomeAdvantage II™	8 - 36kW	240V*	0.3 - 8 GPM	80-140°F	**26-27**
MiniTank™	1.4kW	120V	-----	50-140°F	**28-29**
FlowCo™	1.8 - 10kW	120V, 208V, 240V*, 277V	0.2 - 2 GPM	*Not to Exceed* 140°F	**30-31**
LavAdvantage™	1.8 - 11.5kW	120V, 208V, 240V*, 277V	0.2 - 2 GPM	70-180°F	**32-33**
AccuMix II™	3.5 - 11.5kW	120V, 240V*, 277V	0.3 - 1.5 GPM	105°F	**34-35**
De-Ionized	1.8 - 32kW	120V, 240V*, 208V, 277V, 208V/3ph, 480V/3ph, 480/277V	0.5 - 5 GPM	60-140°F	**36-37**
Disconnect Switches					**38-41**
Accessories and Replacement Parts					**42-46**
NEMA Cabinet Product Options Guide					**47**
Tepid Water Requirements Fact Sheet					**48**
Terms and Conditions and Warranty Information					**49**

* Can be used in 208V applications with 25% reduced temp. output

Important Things to Note

- Complete submittal packages available for download on eemax.com
- All Eemax tankless units are to be hard-wired to the electrical panel box with their own dedicated breaker
- Size ALL Eemax Tankless Water Heaters for required performance, NOT to the existing electrical wiring available
- Temperature settings of the unit are a "high limit not-to-exceed" specification. Refer to "Eemax Sizing Guide"
- Booster applications (heater installed on a hot water feed line) MUST have temperature control
- To obtain the shortest time-to-temperature, install unit(s) as close to the point-of-use as possible
- Verify turn-on, minimum, and maximum flow specification of the heater for the application
- CA and CNL SKUs are Canada specific.
- "C" indicates evaluation and compliance to either Underwriters Laboratories (UL) or Intertek (ETL) under CAN/CSA-C22.2 No. 64/No. 88/No. 110.
- Not all options are compatible with other options
- Single phase Eemax units in the high kilowatt sizes (over 13 kW) often require more than 1 power supply circuit. The Specification Guide shows the number of circuits required and the suggested circuit breaker in this format:
  For example: (3x40)
  This example shows 3 circuits required with each being protected by a 40 amp circuit breaker.

⚠ Warning: Cancer and Reproductive Harm - www.P65Warnings.gov

For additional product specifying needs, contact Eemax Support at **1.800.543.6163** or email **eemax.support@eemax.com**

In the event of a power failure, all Eemax products will fail COLD and water flow through the unit will not be restricted.

SafeAdvantage™ (NEMA 4 Incl.)

For Safety Applications – Eye/Face Wash and Drench Showers

Applications

- Eye/face wash
- Emergency drench showers
- Where tepid water is needed

Features

- 90°F max. output temperature or as specified
- Fully Modulating - Predictive control algorithm and diverse safety features ensures conformity to ANSI Z358.1 tepid water without additional mixing valves (check local codes)
- Fast response rate eliminates the requirement for any additional hot water purge system (no dedicated drain system required)
- T&P not required per UL499 - Check local codes
- Thermo-Optical Sensor for infrared element monitoring
- LCD display and control with built in diagnostics
- Standard model includes NEMA 4 cabinet. NEMA 4X (304 stainless steel) is optional; NEMA 4X6 (316 stainless steel) optional and available on special order - call for quote and availability

Optional Features

- NEMA 4 cabinets:
  N4 = powdercoated steel
  N4X = 304 stainless steel for corrosion resistance
  N4X6 = 316 stainless steel for maximum corrosion resistance
- FP = Freeze Protection down to -30°F
- EDS = Non-Fused Disconnect Switch
- FDS = Fused Disconnect Switch
- EP = Explosion Proof compliant to Class 1 Division II (C1D2) conditions. For other classifications other than C1D2 contact factory
- GFCI = Ground Fault Circuit Interruptor with True TMS operation, digital display, and reset
- SK =Stand Kit 24" legs for freestanding applications
- RD = Remote Display (compatible with EP option)
- SB = Siren/Beacon audible & visual alarm (compatible with EP option)
- DC = Dry Contact for remote monitoring
- ES = Emergency Stop pushbutton

Product Specifications

Min. Operating Pressure:	35 PSI
Max. Operating Pressure:	150 PSI
Optimum Operating Pressure:	60-90 PSI

U.S. Patent #'s: US20140023354 and US20140178057

Installation Requirements

- Properly sized water hammer arrestor
- Minimum 35 PSI dynamic pressure at inlet
- Sediment filter installed on inlet
- EP option requires customer-supplied source of inert gas

Special Design Service

- Inquiries for units for unique applications are welcome. Call our Technical Service department at **1 800 543 6163**.
- Custom orders non-refundable

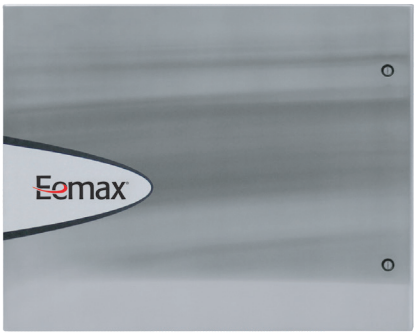

LISTED

C US
LOW LEAD CONTENT

NO LEAD*
*The wetted surface of this product contacted by water contains less than 0.25% lead and meets NSF/ANSI 372

bimobject
Find our products on
bimobject.com
BIM

Certified by CSA to the ASSE 1085 standard.

Suggested Specification

Tankless water heater shall be an Eemax SafeAdvantage model number AP_____.

Factory installation in a _____(N4/N4X/N4X6) enclosure.

Enclosure to be fitted with the following features:

_____	**FP**	Freeze protection (-30°F)
_____	**EDS**	Non-fused disconnect
_____	**FDS**	Fused disconnect
_____	**EP**	Explosion proof (C1D2 compliant)
_____	**GFCI**	True RMS GFCI with digital display and reset
_____	**SK**	24" legs for free standing applications
_____	**RD**	Remote display
_____	**SB**	Siren and Beacon
_____	**DC**	Dry contact
_____	**ES**	Emergency stop - push button

Tankless water heater must have water connections on the bottom, and be constructed with NSF 372 listed materials. Direct heating element to be non-ferrous, cartridge style, designed for field replacement. Tankless water heater to utilize a dual PID algorithm, actively managing power application to real-time system demand. Integrated flow meter capable of volumes in excess of 30 GPM drives predictive control algorithm. Water heater must be protected by redundant safeties. Redundant safeties to include thermo mechanical safety switches, infrared element monitoring via thermo optical sensors, and dual temperature monitoring via master control board. Tankless water heater user interface must have the following capabilities:

- Selectable display including Celsius/Fahrenheit, inlet temperature, outlet temperature, flow rate, and setpoint temperature.
- Capable of displaying flow rate in gallons per minute or liters per minute.
- Diagnostic features to include error and fault code display.
- Control board must maintain error/fault history of 9 events.
- Capable of factory coded temperature setting (max. and min.)
- Capable of firmware upgrades via USB port.
- ASSE 1085-certified and conforms to ANSI Z358.1 tepid water without additional mixing or purge features (inlet temperatures must not exceed 100°F).

Information and product specifications contained in this document are subject to change without notice. REV 2026

SafeAdvantage™ (NEMA 4 Incl.)

For Safety Applications – Eye/Face Wash and Drench Showers

Specifications
Tankless Electric Water Heater

Suffix Definitions

EE Emergency Eyewash. Max. outlet temperature 90°F. Conforms to ANSI Z3581.1 tepid water without additional mixing valve. Shipped with display "Locked."

EFD Emergency Eye, Face & Drench. Max. outlet temperature 90°F. Conforms to ANSI Z3581.1 tepid water without additional mixing valve. Shipped with display "Locked."

Note: Models with an EE or EFD suffix have a 90°F maximum temperature. Temperature rise data is provided for reference, but temperature is electronically limited to factory preset not to exceed temperature.

Pressure Drop 63-150kW

Flow Rate (GPM)	Delta PSI
2	0
3	0
4	0
6	0
8	1
11	3
12	4
15	8
18	8
20	10
22	13
24	14
27	17
30	22
33	26
35	30
37	34
40	43

	MODEL NUMBER	kW	BTU/H	AMPS PER PHASE	TURN ON (GPM)	RECOMMENDED WIRE SIZE (75° C/CU)	TEMPERATURE RISE °F 3.0 GPM	4.0 GPM	5.0 GPM	6.0 GPM	20.0 GPM	23.0 GPM	26.0 GPM	30.0 GPM
	VOLTS 208 Three Phase Delta													
	AP032208 EE N4	32	109,189	89	1.0	3AWG	73°	55°	44°	36°	11°	10°	8°	7°
	AP032208 EE N4X	32	109,189	89	1.0	3 AWG	73°	55°	44°	36°	11°	10°	8°	7°
	AP036208 EE N4	36	122,832	100	1.0	3 AWG	82°	61°	49°	41°	12°	11°	9°	8°
	AP036208 EE N4X	36	122,832	100	1.0	3 AWG	82°	61°	49°	41°	12°	11°	9°	8°
	AP041208 EFD N4	41	139,189	113	1.0	2 AWG	†	70°	56°	47°	14°	12°	11°	9°
	AP041208 EFD N4X	41	139,189	113	1.0	2 AWG	†	70°	56°	47°	14°	12°	11°	9°
	AP054208 EFD N4	54	184,256	150	1.5	1/0 AWG	†	†	74°	61°	18°	16°	14°	12°
	AP054208 EFD N4X	54	184,256	150	1.5	1/0 AWG	†	†	74°	61°	18°	16°	14°	12°
	AP064208 EFD N4	64	218,377	178	2.5	3/0 AWG	†	†	87°	73°	22°	19°	17°	15°
	AP064208 EFD N4X	64	218,377	178	2.5	3/0 AWG	†	†	87°	73°	22°	19°	17°	15°
	VOLTS 480 Three Phase Delta													
	AP036480 EE N4	36	122,837	43	1.0	8 AWG	82°	61°	49°	41°	12°	11°	9°	8°
	AP036480 EE N4X	36	122,837	43	1.0	8 AWG	82°	61°	49°	41°	12°	11°	9°	8°
	AP039480 EE N4	39	133,074	47	1.0	8 AWG	89°	67°	53°	44°	13°	12°	10°	9°
	AP039480 EE N4X	39	133,074	47	1.0	8 AWG	89°	67°	53°	44°	13°	12°	10°	9°
	AP048480 EFD N4	48	163,783	58	1.0	6 AWG	†	82°	66°	55°	16°	14°	13°	11°
	AP048480 EFD N4X	48	163,783	58	1.0	6 AWG	†	82°	66°	55°	16°	14°	13°	11°
	AP054480 EFD N4	54	184,256	65	1.5	6 AWG	†	†	74°	61°	18°	16°	14°	12°
	AP054480 EFD N4X	54	184,256	65	1.5	6 AWG	†	†	74°	61°	18°	16°	14°	12°
	AP063480 EFD N4	63	214,965	76	2.5	4 AWG	†	†	86°	72°	22°	19°	17°	14°
	AP063480 EFD N4X	63	214,965	76	2.5	4 AWG	†	†	86°	72°	22°	19°	17°	14°
	AP072480 EFD N4	72	245,674	87	2.5	3 AWG	†	†	†	82°	25°	21°	19°	16°
	AP072480 EFD N4X	72	245,674	87	2.5	3 AWG	†	†	†	82°	25°	21°	19°	16°
	AP096480 EFD N4	96	327,552	116	2.5	1 AWG	†	†	†	†	33°	29°	25°	22°
	AP096480 EFD N4X	96	327,552	116	2.5	1 AWG	†	†	†	†	33°	29°	25°	22°
	AP108480 EFD N4	108	368,511	130	2.5	1 AWG	†	†	†	†	37°	32°	28°	25°
	AP108480 EFD N4X	108	368,511	130	2.5	1 AWG	†	†	†	†	37°	32°	28°	25°
	AP126480 EFD N4	126	429,930	151	2.5	2/0 AWG	†	†	†	†	43°	37°	33°	29°
	AP126480 EFD N4X	126	429,930	151	2.5	2/0 AWG	†	†	†	†	43°	37°	33°	29°
C	**AP144480 EFD N4**	144	491,348	173	2.5	2/0 AWG	†	†	†	†	49°	43°	38°	33°
C	**AP144480 EFD N4X**	144	491,348	173	2.5	2/0 AWG	†	†	†	†	49°	43°	38°	33°
	VOLTS 600 Three Phase Delta													
C	**AP061600 EFD N4**	61	208,141	59	2.5	6 AWG	†	†	83°	69°	21°	18°	16°	14°
C	**AP061600 EFD N4X**	61	208,141	59	2.5	6 AWG	†	†	83°	69°	21°	18°	16°	14°
C	**AP071600 EFD N4**	71	242,262	68	2.5	4 AWG	†	†	†	81°	24°	21°	19°	16°
C	**AP071600 EFD N4X**	71	242,262	68	2.5	4 AWG	†	†	†	81°	24°	21°	19°	16°
C	**AP102600 EFD N4**	102	348,038	98	2.5	3 AWG	†	†	†	†	35°	30°	27°	23°
C	**AP102600 EFD N4X**	102	348,038	98	2.5	3 AWG	†	†	†	†	35°	30°	27°	23°
C	**AP130600 EFD N4**	130	443,578	125	2.5	1 AWG	†	†	†	†	44°	39°	34°	34°
C	**AP130600 EFD N4X**	130	443,578	125	2.5	1 AWG	†	†	†	†	44°	39°	34°	34°
C	**AP150600 EFD N4**	150	511,821	144	2.5	1/0 AWG	†	†	†	†	51°	45°	39°	34°
C	**AP150600 EFD N4X**	150	511,821	144	2.5	1/0 AWG	†	†	†	†	51°	45°	39°	34°

† Temperature electronically limited to factory preset temperature.

"C" indicates evaluation and compliance to either Underwriters Laboratories (UL) or Intertek (ETL) under CAN/CSA-C22.2 No. 64/No. 88.

Electrical configuration and requirements

All Eemax three phase units are custom made to order and as such, are non-returnable and non-refundable. Check your electrical supply, making sure all criteria for operating your Eemax water heater are met.

SafeAdvantage is compatible with both Delta and Wye electrical configuration requirements. When installing SafeAdvantage to a Wye electrical configuration, the neutral leg is not used.

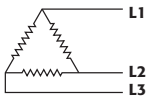

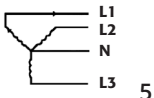

SafeAdvantage™ (NEMA 4 Incl.)

For Safety Applications – Eye/Face Wash and Drench Showers

NEMA Cabinet Options*

Dimensions: 24″H x 30″W x 13.5″D (Total weight est 130 lb)

N4 Powder coated steel

N4X Corrosion-resistant 304 stainless steel

N4X6 Corrosion-resistant 316 stainless steel

Designed for wall mounted installation. Free standing legs and other options available.

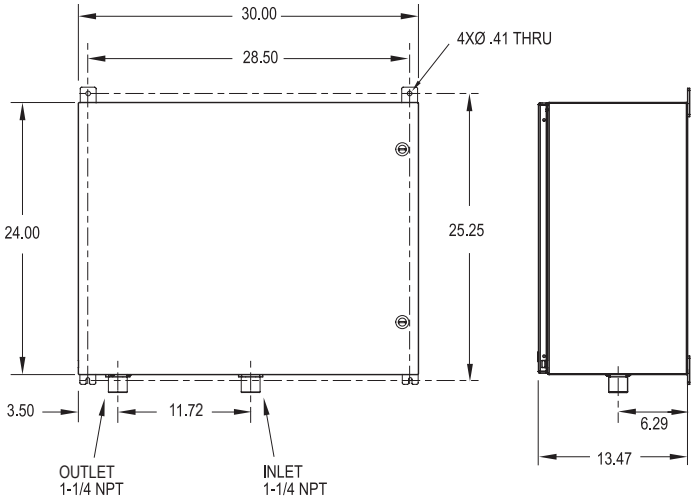

NEMA Cabinet Options Accessories

Dimensions: 36″H x 30″W x 17.3″D

FP Freeze protection (-30°F)

EDS Non-fused disconnect

FDS Fused disconnect

EP Explosion proof (C1D2 compliant)

GFCI True RMS GFCI with digital display and reset

SK 24″ legs for free standing applications

RD Remote display

SB Siren and Beacon

DC Dry contact

ES Emergency stop - push button

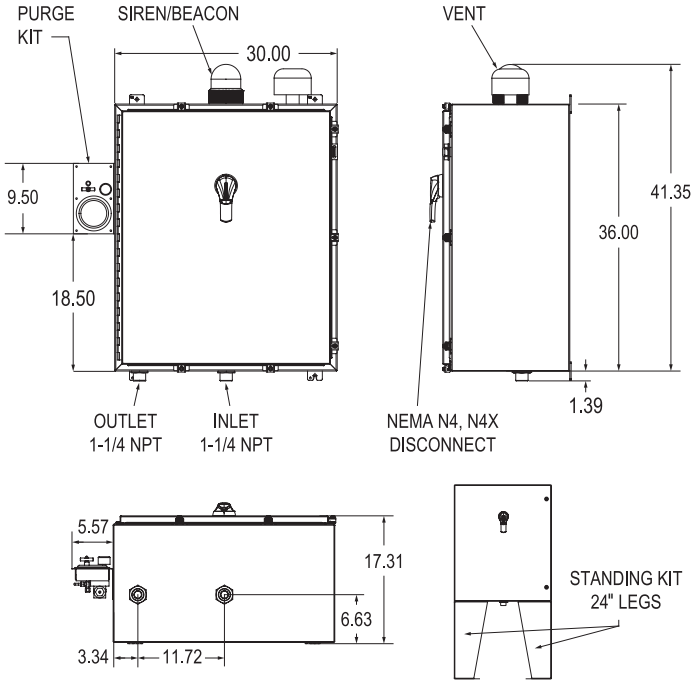

Est. total weight 225 lb. varies based on options.
Designed for wall mounted installation. Free standing legs and other options available.

*Refer to page 47 and 48 of this specification guide for more details regarding selection.

Information and product specifications contained in this document are subject to change without notice. REV 2026

SafeAdvantage™ (NEMA 4 Incl.)

For Safety Applications – Eye/Face Wash and Drench Showers

Typical Safety Shower - Piping Installation Schematic

Below represents an installation of our SafeAvantage heater for safety shower application. Please note the required use of water hammer arrestors, Y-strainer, ball valves and drains.

System Criteria

Max Flow Rate:	30 GPM
Pipe Diameter:	1-1/4" or larger
Optimum Operating Pressure:	60-90 PSI

Suggested piping diagram; additional piping diagrams can be found in the Installation Guide and Owner's Manual.

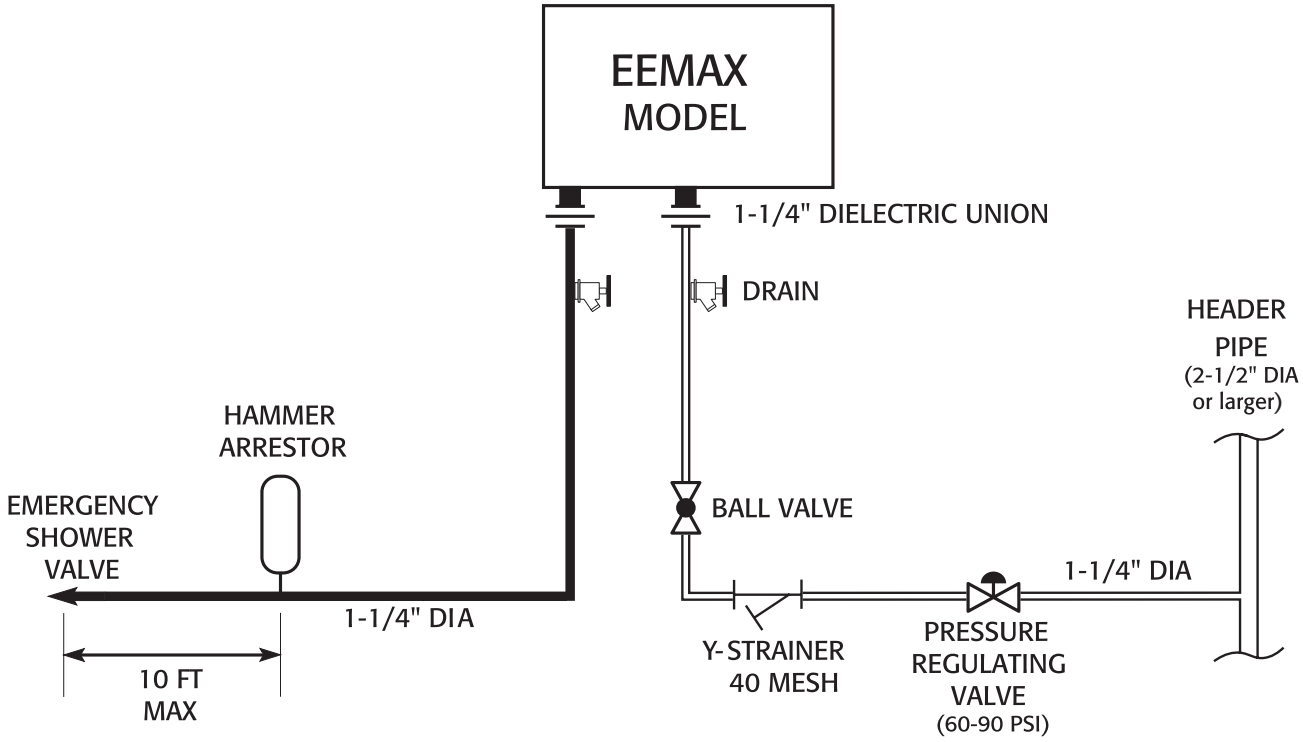

Water Hammer Arrestor Sizing Chart

Pipe Length (header to shower)	**Arrestor Size**
15'	B
15' - 30'	C
30' - 50'	D
50' - 75'	E
75' - 90'	F
90' +	Contact Arrestor Mfgr.

SpecAdvantage™

For Commercial and Industrial Applications

Applications

- Designed for low duty cycle applications where precise temperature controls and low pressure drop are required

Features

- Designed for commercial and industrial applications
- Capable of high volume and high temperature applications at low duty cycle
- Fully modulating - Predictive control algorithm and diverse safety features ensures precise temperature control
- T&P not required per UL499 (check local codes)
- Thermo-Optical Sensor for infrared element monitoring

Optional Features (NEMA cabinet required)

- NEMA 4 cabinets:
  N4 = powdercoated steel
  N4X = 304 stainless steel for corrosion resistance
  N4X6 = 316 stainless steel for maximum corrosion resistance
- FP = Freeze Protection down to -30°F
- EDS = Non-Fused Disconnect Switch
- FDS = Fused Disconnect Switch
- EP = Explosion Proof compliant to Class 1 Division II (C1D2) conditions. For other classifications other than C1D2 contact factory
- GFCI = Ground Fault Circuit Interruptor with True TMS operation, digital display, and reset
- SK =Stand Kit 24" legs for freestanding applications
- RD = Remote Display (compatible with EP option)
- SB = Siren/Beacon audible & visual alarm (compatible with EP option)
- DC = Dry Contact for remote monitoring
- ES = Emergency Stop push button

Product Specifications

Min. Operating Pressure:	35 PSI
Max. Operating Pressure:	150 PSI
Optimum Operating Pressure:	60-90 PSI

U.S. Patent #'s: US20140023354 and US20140178057

Installation Requirements

- Properly sized water hammer arrestor
- Minimum 35 PSI dynamic pressure at inlet
- Sediment filter installed on inlet
- EP option requires customer-supplied source of inert gas

Special Design Service

- Inquiries for units for unique applications are welcome. Call our Technical Service department at **1 800 543 6163**.
- Custom orders non-refundable

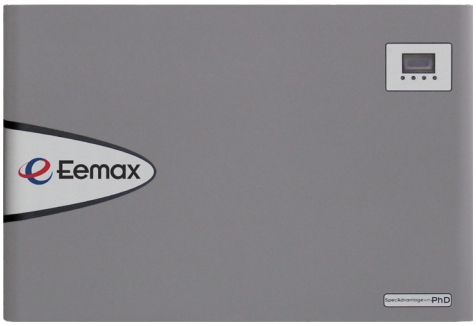

LISTED

C US LOW LEAD CONTENT

NO LEAD*
*The wetted surface of this product contacted by water contains less than 0.25% lead and meets NSF/ANSI 372

EE/EFD models certified by CSA to the ASSE 1085 standard.

Suggested Specification

Tankless water heater shall be an Eemax SpecAdvantage model number AP_____.

Optional factory installation in a ____(N4/N4X/N4X6) enclosure.

Enclosure to be fitted with the following features:

_____	**FP**	Freeze protection (-30°F)
_____	**EDS**	Non-fused disconnect
_____	**FDS**	Fused disconnect
_____	**EP**	Explosion proof (C1D2 compliant)
_____	**GFCI**	True RMS GFCI with digital display and reset
_____	**SK**	24" legs for free standing applications
_____	**RD**	Remote display
_____	**SB**	Siren and Beacon
_____	**DC**	Dry contact
_____	**ES**	Emergency stop - push button

Tankless water heater must have water connections on the bottom, and be constructed with NSF 372 listed materials. Direct heating element to be non-ferrous, cartridge style, designed for field replacement. Tankless water heater to utilize a dual PID algorithm, actively managing power application to real-time system demand. Integrated flow meter capable of volumes in excess of 30 GPM drives predictive control algorithm. Water heater must be protected by redundant safeties. Redundant safeties to include thermo mechanical safety switches, infrared element monitoring via thermo optical sensors, and dual temperature monitoring via master control board. Tankless water heater user interface must have the following capabilities:

- Selectable display including Celsius/Fahrenheit, inlet temperature, outlet temperature, flow rate, and setpoint temperature.
- Capable of displaying flow rate in gallons per minute or liters per minute.
- Diagnostic features to include error and fault code display.
- Control board must maintain error/fault history of 9 events.
- Capable of factory coded temperature setting (max. and min.)
- Capable of firmware upgrades via USB port
- EE and EFD options are ASSE 1085-Certified and conform to ANSI Z358.1 tepid water without additional mixing or purge features (inlet temperatures must not exceed 100°F when selecting an EE or EFD option).

NOTE: For recirculation applications, follow the installation schematics in the installation manual.

Information and product specifications contained in this document are subject to change without notice. REV 2026

Suffix Definitions

S **Sanitation.** Shipped at 180°F with temp range of 100°F-180°F max.

EE **Emergency Eyewash.** Max. outlet temperature 90°F. Conforms to ANSI Z3581.1 tepid water without additional mixing valve. Shipped with display "Locked."

EFD **Emergency Eye, Face & Drench.** Max. outlet temperature 90°F. Conforms to ANSI Z3581.1 tepid water without additional mixing valve. Shipped with display "Locked."

Note: Models with an EE or EFD suffix have a 90°F maximum temperature. Temperature rise data is provided for reference, but temperature is electronically limited to factory preset not to exceed temperature.

							TEMPERATURE RISE °F							
	MODEL NUMBER	kW	BTU/H	AMPS PER PHASE	TURN ON (GPM)	RECOMMENDED WIRE SIZE (75° C/CU)	3.0 GPM	4.0 GPM	5.0 GPM	6.0 GPM	20.0 GPM	23.0 GPM	26.0 GPM	30.0 GPM
	VOLTS 208 Three Phase Delta													
	AP032208	32	109,189	89	1.0*	3AWG	73°	55°	44°	36°	11°	10°	8°	7°
	AP032208 EE	32	109,189	89	1.0	3 AWG	†	55°	44°	36°	11°	10°	8°	7°
	AP032208 S	32	109,189	89	2.5**	3 AWG	73°	55°	44°	36°	11°	10°	8°	7°
	AP036208	36	122,832	100	1.0*	3 AWG	82°	61°	49°	41°	12°	11°	9°	8°
	AP036208 EE	36	122,832	100	1.0	3 AWG	†	†	49°	41°	12°	11°	9°	8°
	AP036208 S	36	122,832	110	2.5**	3 AWG	82°	61°	49°	41°	12°	11°	9°	8°
	AP041208	41	143,310	113	1.0*	2 AWG	93°	70°	56°	47°	14°	12°	11°	9°
	AP041208 EFD	41	143,310	113	1.0	2 AWG	†	†	56°	47°	14°	12°	11°	9°
	AP041208 S	41	143,310	113	2.5**	2 AWG	93°	70°	56°	47°	14°	12°	11°	9°
	AP054208	54	184,256	150	1.5*	1/0 AWG	†	92°	74°	61°	18°	16°	14°	12°
	AP054208 EFD	54	184,256	150	1.5	1/0 AWG	†	†	†	†	18°	16°	14°	12°
	AP054208 S	54	184,256	150	6.0**	1/0 AWG	123°	92°	74°	61°	18°	16°	14°	12°
	AP064208	64	218,377	178	2.5	3/0 AWG	†	109°	87°	73°	22°	19°	17°	15°
	AP064208 EFD	64	218,377	178	2.5	3/0 AWG	†	†	†	†	22°	19°	17°	15°
	AP064208 S	64	218,377	178	6.0**	3/0 AWG	146°	109°	87°	73°	22°	19°	17°	15°
	VOLTS 480 Three Phase Delta													
	AP036480	36	122,837	43	1.0*	8 AWG	82°	61°	49°	41°	12°	11°	9°	8°
	AP036480 EE	36	122,837	43	1.0	8 AWG	†	†	49°	41°	12°	11°	9°	8°
	AP036480 S	36	122,837	43	2.5**	8 AWG	82°	61°	49°	41°	12°	11°	9°	8°
	AP039480	39	133,074	47	1.0*	8 AWG	89°	67°	53°	44°	13°	12°	10°	9°
	AP039480 EE	39	133,074	47	1.0	8 AWG	†	†	53°	44°	13°	12°	10°	9°
	AP039480 S	39	133,074	47	2.5**	8 AWG	89°	67°	53°	44°	13°	12°	10°	9°
	AP048480	48	163,783	58	1.0*	6 AWG	109°	82°	66°	55°	16°	14°	13°	11°
	AP048480 EFD	48	163,783	58	1.0	6 AWG	†	†	†	55°	16°	14°	13°	11°
	AP048480 S	48	163,783	58	2.5**	6 AWG	109°	82°	66°	55°	16°	14°	13°	11°
	AP054480	54	184,256	65	1.5*	6 AWG	†	92°	74°	61°	18°	16°	14°	12°
	AP054480 EFD	54	184,256	65	1.5	6 AWG	†	†	†	†	18°	16°	14°	12°
	AP054480 S	54	184,256	65	2.5**	6 AWG	123°	92°	74°	61°	18°	16°	14°	12°
	AP063480	63	214,965	76	2.5	4 AWG	†	108°	86°	72°	22°	19°	17°	14°
	AP063480 EFD	63	214,965	76	2.5	4 AWG	†	†	†	†	22°	19°	17°	14°
	AP063480 S	63	214,965	76	6.0**	4 AWG	143°	108°	86°	72°	22°	19°	17°	14°
	AP072480	72	245,674	87	2.5	3 AWG	†	†	98°	82°	25°	21°	19°	16°
	AP072480 EFD	72	245,674	87	2.5	3 AWG	†	†	†	†	25°	21°	19°	16°
	AP072480 S	72	245,674	87	6.0**	3 AWG	†	123°	98°	82°	25°	21°	19°	16°
	AP096480	96	327,552	116	2.5	1 AWG	†	†	†	109°	33°	29°	25°	22°
	AP096480 EFD	96	327,552	116	2.5	1 AWG	†	†	†	†	33°	29°	25°	22°
	AP096480 S	96	327,552	116	6.0**	1 AWG	†	†	131°	109°	33°	29°	25°	22°
	AP108480	108	368,511	130	2.5	1 AWG	†	†	†	†	37°	32°	28°	25°
	AP108480 EFD	108	368,511	130	2.5	1 AWG	†	†	†	†	37°	32°	28°	25°
	AP108480 S	108	368,511	130	6.0**	1 AWG	†	†	148°	123°	37°	32°	28°	25°
	AP126480	126	429,930	151	2.5	2/0 AWG	†	†	†	†	43°	37°	33°	29°
	AP126480 EFD	126	429,930	151	2.5	2/0 AWG	†	†	†	†	43°	37°	33°	29°
	AP126480 S	126	429,930	151	6.0**	2/0 AWG	†	†	†	143°	43°	37°	33°	29°
C	**AP144480**	144	491,348	173	2.5	2/0 AWG	†	†	†	†	49°	43°	38°	33°
C	**AP144480 EFD**	144	491,348	173	2.5	2/0 AWG	†	†	†	†	49°	43°	38°	33°
C	**AP144480 S**	144	491,348	173	6.0**	2/0 AWG	†	†	†	†	49°	43°	38°	33°
	VOLTS 600 Three Phase Delta													
C	**AP061600 EFD**	61	208,141	59	2.5	6 AWG	†	†	†	†	21°	18°	16°	14°
C	**AP071600 EFD**	71	242,262	68	2.5	4 AWG	†	†	†	†	24°	21°	19°	16°
C	**AP102600 EFD**	102	348,038	98	2.5	3 AWG	†	†	†	†	35°	30°	27°	23°
C	**AP130600 EFD**	130	443,578	125	2.5	1 AWG	†	†	†	†	44°	39°	34°	30°
C	**AP150600 EFD**	150	511,821	144	2.5	1/0 AWG	†	†	†	†	51°	45°	39°	34°

* Units with a 1.0 or 1.5 GPM turn-on are limited to 120°F only. Contact Eemax support for applications above 120°F.
† Temperature electronically limited to factory preset temperature.
"C" indicates evaluation and compliance to either Underwriters Laboratories (UL) or Intertek (ETL) under CAN/CSA-C22.2 No. 64/No. 88.
** Contact Eemax for applications requiring lower turn on.

Electrical configuration and requirements

All Eemax three phase units are custom made to order and as such, are non-returnable and non-refundable. Check your electrical supply, making sure all criteria for operating your Eemax water heater are met.

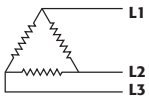

SpecAdvantage is compatible with both Delta and Wye electrical configuration requirements. When installing SpecAdvantage to a Wye electrical configuration, the neutral leg is not used.

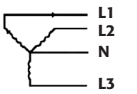

Base Model Dimensions

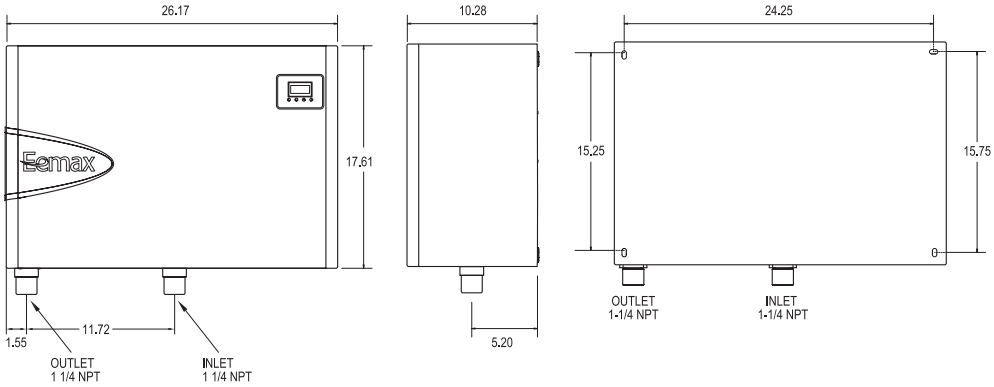

65 lb
Designed for wall mount installation.

NEMA Cabinet Options*

Dimensions: 24″H x 30″W x 13.5″D

N4	Powder coated steel
N4X	Corrosion-resistant 304 stainless steel
N4X6	Corrosion-resistant 316 stainless steel

Est. total weight 130 lb
Designed for wall mounted installation. Free standing legs and other options available

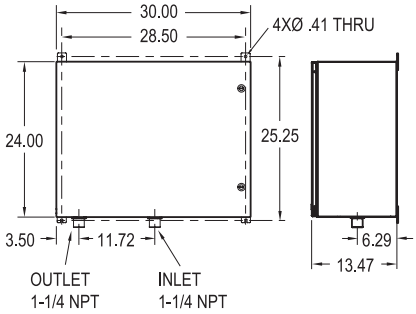

NEMA Cabinet Options Accessories

Dimensions: 36″H x 30″W x 17.3″D

FP	Freeze protection (-30°F)
EDS	Non-fused disconnect
FDS	Fused disconnect
EP	Explosion proof (C1D2 compliant)
GFCI	True RMS GFCI with digital display and reset
SK	24″ legs for free standing applications
RD	Remote display
SB	Siren and Beacon
DC	Dry contact
ES	Emergency stop - push button

Est. total weight 225 lb, varies based on options.
Designed for wall mounted installation. Free standing legs and other options available.

*Refer to page 47 of this specification guide for more details regarding selection.

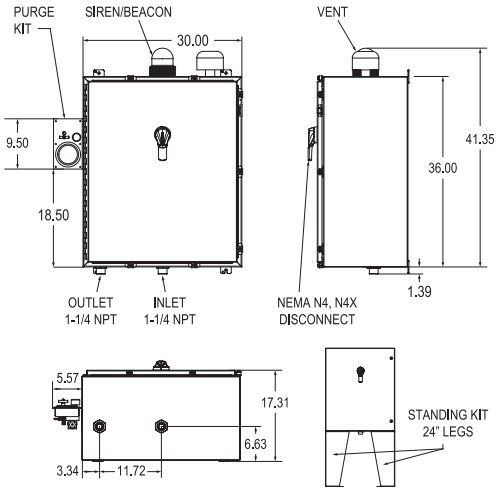

Information and product specifications contained in this document are subject to change without notice. REV 2026

Three Phase™

Triple Module, Commercial/Industrial Thermostatic 3-Phase Heater

Applications

- Eye/face wash (EE option)
- Where tepid water is needed
- Multiple lavatories (ML option)
- Restaurants and other food service requirements
- Booster applications
- Manufacturing and wash down processes
- Commercial and industrial

Features

- Available electrical models are 480V Delta (ED models) or 208V Delta (EX models) no neutral leg required
- Fitted with 1/2" compression fittings and electrical entry on the bottom
- Built in over temp protection
- Flow switch activates heater only on demand (no standby heat loss)
- Factory set temperature available. Range ambient to 180°F
- Capacity to 5 GPM (T3 only), 4 GPM (T2T)
- Thermostatic control. Microprocessor provides stable outlet temperatures
- Warranty, five (5) years limited on leaks, one (1) year parts
- Field serviceable replaceable cartridge element
- Standard temperature is 120°F

Optional Features

- Emergency eye/face wash ANSI Z358.1 (EE)
- Factory set to a prespecified target temperature between 180°F - 180°F (FS)
- "ML" 0.3 turn on. Staged up to 4 lavs 105°F - 110°F temp setting, aerators supplied
- Sanitation 180°F (S)
- N4, N4X (304SS) enclosures

Product Specifications

Dimensions:	18.25" x 12.25" x 4.5"
Weight:	15 lb
Cover:	Powder Coated Steel
Color:	White
Element:	Triple replaceable Nichrome cartridge elements insert
Fittings:	1/2" compression fittings at bottom of unit
Min. Operating Pressure:	45 PSI
Max. Operating Pressure:	150 PSI

U.S. Patent #'s: 4,762,980 and 4,960,976

Special Design Service

Inquiries for units for unique applications are welcome.
Call our Technical Service department at **1 800 543 6163**.

LISTED

NO LEAD*
*The wetted surface of this product contacted by water contains less than 0.25% lead and meets NSF/ANSI 372

bimobject
Find our products on
bimobject.com
BIM

Electrical configuration and requirements
All Eemax three phase units are custom made to order and as such, are non-returnable and non-refundable. Check your electrical supply, making sure all criteria for operating your Eemax water heater are met.

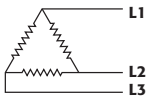

Three Phase is compatible with both Delta and Wye electrical configuration requirements.
When installing Three Phase to a Wye electrical configuration, the neutral leg is not used.

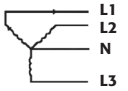

Suggested Specification

Tankless water heater shall be an Eemax "Three Phase" model number _____.

Element shall be replaceable cartridge insert. Element shall be iron free, Nickel Chrome material. Heater shall be fitted with 1/2" compression fittings. Heater shall be installed upright with water connections on bottom. Hot water storage tanks prohibited. Unit shall be Eemax or approved equal.

NOTE: Refer to rating chart for product information.

Enclosure to be fitted with the following features:

_____ **EE**	Emergency Eyewash. Meets ANSI tepid water requirements
_____ **FS**	Factory Set. Customer specified factory-set not to exceed temperature up to 180°F
_____ **ML**	"ML" 0.3 turn on. Staged up to 4 lavs 105°F - 110°F temp setting, aerators supplied
_____ **S**	Sanitation. Factory preset not to exceed temperature of 180°F
_____ **N4**	NEMA 4 steel cabinet with powder coat finish
_____ **N4X**	NEMA 4 stainless steel, corrosion-resistant cabinet
EX68031-16	Disconnect Switch (see page 38 - 41)

Three Phase™

Triple Module, Commercial/Industrial Thermostatic 3-Phase Heater

Suffix Definitions

EE Meets ANSI Z358.1 emergency eye/face wash tepid water requirements

FS Factory set to a prespecified target temperature between 95°F - 180°F

ML Multi lavs 0.3 turn on. Staged up to 4 lavs 105°F-110°F temp setting

S Sanitation 180°F

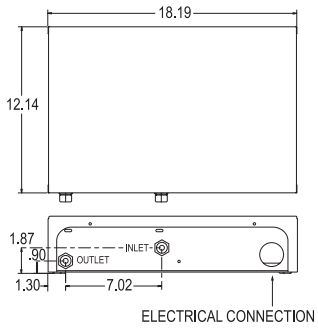

NEMA 4/4X*

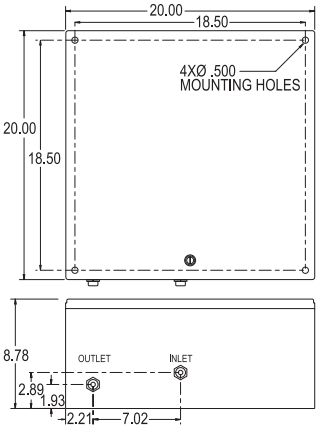

	MODEL NUMBER	kW	AMPS PER PHASE	TURN ON (GPM)	RECOMMENDED WIRE SIZE (75° C/CU)	MAX FLOW GPM	TEMPERATURE RISE °F 2.0 GPM	2.5 GPM	3.0 GPM	4.0 GPM	5.0 GPM
	VOLTS 208 Three Phase Delta††										
C	**EX180T2T**	18	50/phase	0.7	8 AWG	4.0	61°	49°	41°	31°	–
C	**EX180T2T EE**	18	50/phase	0.7	8 AWG	4.0	†	49°	41°	31°	–
C	**EX180T2T S**	18	50/phase	0.7	8 AWG	4.0	61°	49°	41°	31°	–
C	**EX180T2T ML**	18	50/phase	0.3	8 AWG	4.0	61°	49°	41°	31°	–
C	**EX180T2T FS**	18	50/phase	0.7	8 AWG	4.0	61°	49°	41°	31°	–
C	**EX180T3**	18	50/phase	2.0	8 AWG	5.0	61°	49°	41°	31°	25°
C	**EX180T3 EE**	18	50/phase	2.0	8 AWG	5.0	†	49°	41°	31°	25°
C	**EX180T3 S**	18	50/phase	2.0	8 AWG	5.0	61°	49°	41°	31°	25°
C	**EX180T3 FS**	18	50/phase	2.0	8 AWG	5.0	61°	49°	41°	31°	25°
C	**EX240T2T**	24	67/phase	0.7	4 AWG	4.0	82°	66°	55°	41°	–
C	**EX240T2T EE**	24	67/phase	0.7	4 AWG	4.0	†	†	55°	41°	–
C	**EX240T2T S**	24	67/phase	0.7	4 AWG	4.0	82°	66°	55°	41°	–
C	**EX240T2T ML**	24	67/phase	0.3	4 AWG	4.0	82°	66°	55°	41°	–
C	**EX240T2T FS**	24	67/phase	0.7	4 AWG	4.0	82°	66°	55°	41°	–
C	**EX240T3**	24	67/phase	2.0	4 AWG	5.0	82°	66°	55°	41°	33°
C	**EX240T3 EE**	24	67/phase	2.0	4 AWG	5.0	†	†	55°	41°	33°
C	**EX240T3 S**	24	67/phase	2.0	4 AWG	5.0	82°	66°	55°	41°	33°
C	**EX240T3 FS**	24	67/phase	2.0	4 AWG	5.0	82°	66°	55°	41°	33°
	VOLTS 480 Three Phase Delta										
	ED020480T2T	20	24/phase	0.7	10 AWG	4.0	68°	55°	46°	34°	–
	ED020480T2T EE	20	24/phase	0.7	10 AWG	4.0	68°	55°	46°	34°	–
	ED020480T2T S	20	24/phase	0.7	10 AWG	4.0	68°	55°	46°	34°	–
	ED020480T2T ML	20	24/phase	0.3	10 AWG	4.0	68°	55°	46°	34°	–
	ED020480T2T FS	20	24/phase	0.7	10 AWG	4.0	68°	55°	46°	34°	–
	ED020480T3	20	24/phase	2.0	10 AWG	5.0	68°	55°	46°	34°	27°
	ED020480T3 EE	20	24/phase	1.0	10 AWG	5.0	†	55°	46°	34°	27°
	ED020480T3 S	20	24/phase	2.0	10 AWG	5.0	68°	55°	46°	34°	27°
	ED024480T2T	24	29/phase	0.7	10 AWG	4.0	82°	66°	55°	41°	–
	ED024480T2T S	24	29/phase	0.7	10 AWG	4.0	82°	66°	55°	41°	–
	ED024480T2T ML	24	29/phase	0.3	10 AWG	4.0	82°	66°	55°	41°	–
	ED024480T2T FS	24	29/phase	0.7	10 AWG	4.0	82°	66°	55°	41°	–
	ED024480T3	24	29/phase	2.0	10 AWG	5.0	82°	66°	55°	41°	33°
	ED024480T3 EE	24	29/phase	1.0	10 AWG	5.0	†	†	55°	41°	33°
	ED024480T3 S	24	29/phase	2.0	10 AWG	5.0	82°	66°	55°	41°	33°
	ED032480T2T	32	38/phase	0.7	8 AWG	4.0	109°	87°	73°	55°	–
	ED032480T2T S	32	38/phase	0.7	8 AWG	4.0	109°	87°	73°	55°	–
	ED032480T2T ML	32	38/phase	0.3	8 AWG	4.0	109°	87°	73°	55°	–
	ED032480T2T FS	32	38/phase	0.7	8 AWG	4.0	109°	87°	73°	55°	–
	ED032480T3	32	38/phase	2.0	8 AWG	5.0	109°	87°	73°	55°	44°
	ED032480T3 EE	32	38/phase	1.0	8 AWG	5.0	†	†	†	55°	44°
	ED032480T3 S	32	38/phase	2.0	8 AWG	5.0	109°	87°	73°	55°	44°
	ED032480T3 FS	32	38/phase	2.0	8 AWG	5.0	109°	87°	73°	55°	44°

†Temperature electronically limited to factory preset not to exceed temperature.
"C" indicates evaluation and compliance to either Underwriters Laboratories (UL) or Intertek (ETL) under CAN/CSA-C22.2 No. 64/No. 88.

*Refer to page 43 of this specification guide for more details regarding selection.
† † ATTENTION: Under no circumstances can Three Phase be connected to a 240 V three phase load center.

Disconnect Switch Applications

EX68031-15	EX68031-16
ED020480T2T, ED020480T3, ED024480T2T, ED02J424480T3	EX180T2T, EX180T3, ED032480T2T, ED032480T3

Information and product specifications contained in this document are subject to change without notice. REV 2026

ProSeries™

For Single Point-of-Use or Multiple Applications

Applications

▪ Showerheads	2.0 GPM max*
▪ Low-flow Shower Heads	1.8 GPM max**
▪ Lavatory Faucets (other than residential)	1.8 GPM max*
	1.5 GPM max*
	0.5 GPM max*

* as per 2021 Uniform Plumbing Code guidelines
** as per 2022 California Green Buildings Standards Code

Features

- Instant, consistent, and endless hot water
- Protected internal temperature control
- Copper immersion heating elements with brass top increases durability and are threaded for easy replacement
- Simple Installation
- Internal temperature control adjustable in increments of 1°F
- 8-13 kW units: Temperature range 80°-140°F
- 18-36 kW units: Temperature range 80°-180°F

Special Design Service

Inquiries for units for unique applications are welcome. Call our Technical Service department at **1 800 543 6163.**

Suggested Specification

Tankless water heater shall be an Eemax ProSeries model number PR_____.

Unit shall have copper clad immersion heating element(s) with brass terminations for increased durability. Temperature control and display to be internal to the unit, and adjustable in 1°F increments with a range of 80°-140°F; 80°-180°F on 18-36kW units. Display shall be capable of displaying setpoint temperature in Celsius or Fahrenheit temperature scales. Unit shall utilize a flow meter with a 0.3 GPM activation point and manage power based on actual flow rate and inlet temperature. Values to be processed 60 times per second. **Unit shall be certified lead free, certified to UL499 and CSA-C22.2 No. 64.**

PR008240/PR011240/PR13240

PR018240

PR024240/PR027240

PR036240

Intertek

NO LEAD
*The wetted surface of this product contacted by water contains less than 0.25% lead and meets NSF/ANSI 372

bimobject
Find our products on bimobject.com
BIM

C US
LOW LEAD CONTENT

AHRI CERTIFIED

ProSeries™

For Single Point-of-Use or Multiple Applications

	MODEL NUMBER	kW	TOTAL AMP DRAW	CIRCUITS REQUIRED X BREAKER SIZE	TURN ON (GPM)	RECOMMENDED WIRE SIZE (75° C/CU)	MAX FLOW GPM	TEMPERATURE RISE °F 0.5 GPM	1.0 GPM	1.5 GPM	2.0 GPM	2.5 GPM	3.0 GPM	4.0 GPM	5.0 GPM	6.0 GPM
	Volts 240 or 208 single phase only††															
C	**PR008240**	8.0	33	(1x40)	0.3	8 AWG	4.8	109°	55°	36°	27°	22°	18°	14°	11°	–
C	**PR008240** (derated 208V performance)	6.0	29	(1x40)	0.3	8 AWG	4.8	82°	41°	27°	20°	16°	14°	10°	–	–
C	**PR011240**	11.0	46	(1x50)	0.3	8 AWG	4.8	†	75°	50°	38°	30°	25°	19°	15°	–
C	**PR011240** (derated 208V performance)	8.3	40	(1x50)	0.3	8 AWG	4.8	†	56°	38°	28°	23°	19°	14°	–	–
C	**PR013240**	13.0	54	(1x60)	0.3	8 AWG	4.8	†	89°	59°	44°	36°	30°	22°	18°	15°
C	**PR013240** (derated 208V performance)	9.8	47	(1x60)	0.3	8 AWG	4.8	†	67°	45°	34°	27°	22°	17°	–	–
C	**PR018240**	18.0	75	(2x40)	0.3	8 AWG	7.0	†	123°	82°	61°	49°	41°	31°	25°	20°
C	**PR018240** (derated 208V performance)	13.5	65	(2x40)	0.3	8 AWG	7.0	†	92°	62°	46°	37°	31°	23°	18°	15°
C	**PR024240**	24.0	100	(3x40)	0.3	8 AWG	7.0	†	†	109°	82°	66°	55°	41°	33°	27°
C	**PR024240** (derated 208V performance)	18.0	87	(3x40)	0.3	8 AWG	7.0	†	†	82°	62°	49°	41°	31°	25°	21°
C	**PR027240**	27.0	113	(3x40)	0.3	8 AWG	7.0	†	†	123°	92°	74°	61°	46°	37°	31°
C	**PR027240** (derated 208V performance)	20.3	98	(3x40)	0.3	8 AWG	7.0	†	†	92°	69°	55°	46°	35°	28°	23°
C	**PR036240**	36.0	150	(4x40)	0.3	8 AWG	8.0	†	†	†	123°	98°	82°	61°	49°	41°
C	**PR036240** (derated 208V performance)	27.0	130	(4x40)	0.3	8 AWG	8.0	†	†	†	92°	74°	62°	46°	37°	31°

* 240V units can be used on 208V single phase with approximately 25% reduced kilowatt output. Please note per UL standards the rating plate and installation instructions will all be according to a 240V applied voltage. Check with local officials prior to derating the electrical infrastructure.

† Temperature electronically limited setting on adjustable thermostat on front cover

"C "indicates evaluation and compliance to either Underwriters Laboratories (UL) or Intertek (ETL) under CAN/CSA-C22.2 No. 64/No. 88.

†† **ATTENTION:** Under no circumstances can ProSeries be connected to a 208 V or 240 V three phase load center. Connection to any three phase load center will void all warranty coverage.

Product Specifications

Dynamic Operating Pressure:	25 PSI min., 150 PSI max.
Certifications:	ETL Listed to UL499 and CSA-C22.2 No. 64
Temperature Stability:	+/–1° at steady state flow

PR008240/PR011240/PR013240

Size:	11.5"H 8"W x 3.75"D
Weight:	8 kw: 4.75 lb, 11 kw/13 kw: 7 lb
Unique Features:	Welded exchanger, 1/2" compression fittings with 1/2" NPT adapters included
Adj. Temp. Range:	80°F-140°F

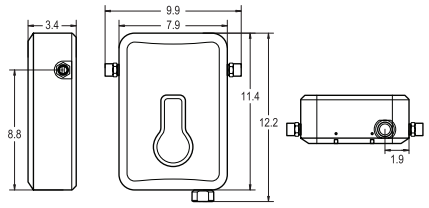

PR018240

Size:	17"H x 14"W x 3.75"D
Weight:	11.25 lb
Unique Features:	Brazed exchanger, 3/4" NPT fittings
Adj. Temp. Range:	80°F-180°F

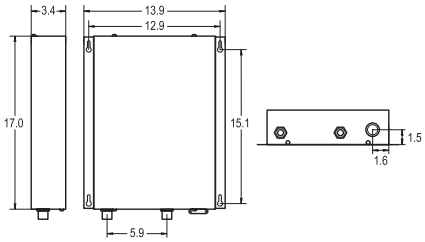

PR024240/PR027240

Size:	17"H x 17"W x 3.75"D
Weight:	13.75 lb
Unique Features:	Brazed exchanger, 3/4" NPT fittings
Adj. Temp. Range:	80°F-180°F

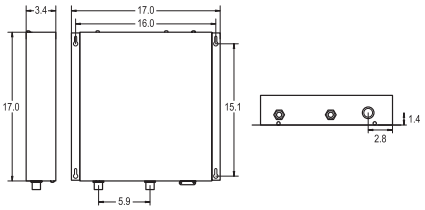

PR036240

Size:	17"H x 21"W x 3.75"D
Weight:	17.4 lb
Unique Features:	Brazed exchanger, 3/4" NPT fittings
Adj. Temp. Range:	80°F-180°F

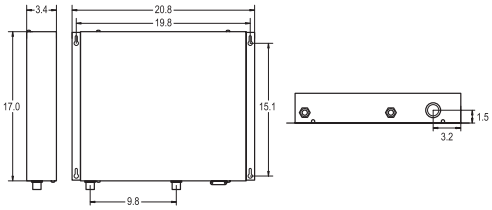

EX68031-16: Disconnect Switch Applications	**Disconnects Required**
PR008240, PR011240, PR013240	1
PR018240	2
PR024240, PR027240	3
PR036240	4

Information and product specifications contained in this document are subject to change without notice. REV 2026

Eemax Inline Flow Regulator

- Enhanced outlet temperature control
- Install on the outlet side of the heater
- Limit maximum volume to the specified flow rate to ensure exiting temperature is within an acceptable range
- Flow Regulators for ½″ and ¾″ plumbing connections
- Restriction range: 1.0 to 5.0 gallons per minute

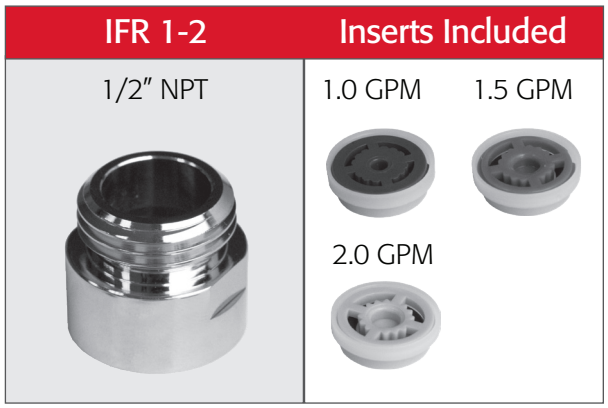

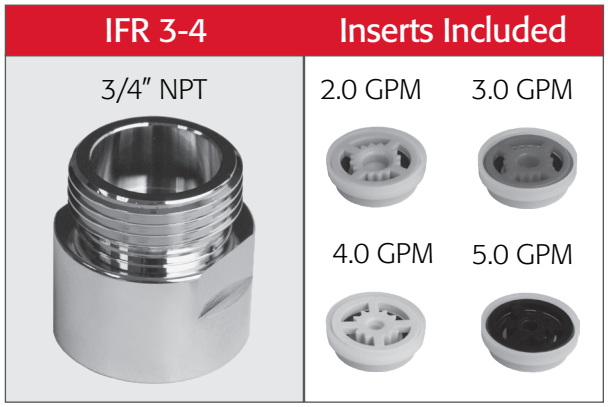

Eemax Inline Flow Regulator

EEMAX PART NUMBER	GPM RATING OF INSERTS PROVIDED	CONNECTION SIZE
IFR 1-2	1.0, 1.5, 2.0	1/2″ NPT
IFR 3-4	2.0, 3.0, 4.0, 5.0	3/4″ NPT
EX0061-2.5-IFR	2.5	3/4″ NPT

Eemax Inline Flow Regulator Suggested Sizing Guide*

		Inlet Water Temperature			
		40°	50°	60°	70°
PR008240	IFR 1-2	1.0	1.0	1.0	1.5
PR011240	IFR 1-2	1.0	1.0	1.5	2.0
PR013240	IFR 1-2	1.0	1.5	2.0	2.0
PR018240	IFR 3-4	2.0	2.0	2.0	3.0
PR024240	IFR 3-4	2.0	2.0	3.0	4.0
PR027240	IFR 3-4	2.0	3.0	4.0	5.0
PR036240	IFR 3-4	3.0	4.0	5.0	5.0

*Selection based on inlet temperature and an outlet temperature setting of 105°F

Eemax Inline Flow Regulator Suggested Sizing Guide*

		Inlet Water Temperature			
		40°	50°	60°	70°
HA008240	IFR 1-2	1.0	1.0	1.0	1.5
HA011240	IFR 1-2	1.0	1.0	1.5	2.0
HA013240	IFR 1-2	1.0	1.5	2.0	2.0
HA018240	IFR 3-4	2.0	2.0	2.0	3.0
HA024240	IFR 3-4	2.0	2.0	3.0	4.0
HA027240	IFR 3-4	2.0	3.0	4.0	5.0
HA036240	IFR 3-4	3.0	4.0	5.0	5.0

*Selection based on inlet temperature and an outlet temperature setting of 105°F

ProSeries XTP™

Thermostatic Water Heater for Commercial and Industrial Applications

Applications

- Booster (up to 180°F)
- Recirculation loop*
- Washdown processes
- Commercial kitchens / utility sinks
- Kitchen, wet bar, utility sinks
- Mop sinks
- Dishwasher

Features

- Adaptive Stability Technology™ assesses the heater condition and shifts unit operation to ensure a consistent and reliable output
- Includes wall mounting bracket allowing for easy, flexible installation, reducing time and labor
- SafeStart™ engages upon start-up to avoid dry-fire occurrence
- 4-line, 20-character LED display delivers an enhanced user experience - display relays system status & operation feedback
- Built to last - constructed of powder-coated galvanized steel, stainless steel heat exchanger and sheathed copper heating elements, protecting the heater and minimizing the occurrence of rust and corrosion
- Self-diagnostics with intelligent controls actively protect heater in installed environment
- Flow activation at 0.5 GPM/ 1.89 LPM across product line
- Max flow of 20 GPM
- Fittings suit common plumbing connections (3/4" NPT)
- Temperature stability at +/- 1°F or +/- 0.6°C output
- High temperature limit switch enables safe operation
- Powered by three phase delta, capable of supporting locations serviced by three phase wye or three phase delta power
- Only one input water line, cold or hot, needed for installation
- Factory set to 120°F
- Compact size for flexible installation
- User adjustable turn on flow
- User adjustable temperature settings 60° - 180°F
- Inlet/outlet thermistors for precise temperature control
- Tamper resistant controls (hardware lockout)
- IP25-rated cover prevents water intrusion within the system (water run-off and minimal corrosion)

Optional Features (NEMA cabinet required)

- N4 (powder coated steel), N4X (304SS) N4X6 (316SS) enclosures
- Free standing legs
- Freeze protection for harsh climate, up to -30°F
- Non-fused or fused electrical disconnect
- GFCI
- Explosion proof – C1D2 Compliant, local certification required. Class Z purge and pressurization system provided with pressure switch for alarm controls. For classification other than C1D2 please contact the factory to discuss options.
- Siren and beacon - audible and visual alarm (C1D2 compliant when paired with explosion proof package)
- Display is visible regardless of NEMA cabinet selection

Product Specifications

Min. Operating Pressure:	35 PSI
Max. Operating Pressure:	150 PSI
Optimum Operating Pressure:	60-90 PSI

*When used in a recirculation application, please consult your Eemax representative for assistance from our Applications Engineering team.

Electrical configuration and requirements
All Eemax three phase units are custom made to order and as such, are non-returnable and non-refundable. Check your electrical supply, making sure all criteria for operating your Eemax water heater are met.

Eemax 480V and 208V Three Phase Units Delta Configuration
Requires: 3 Lives and 1 Ground (earth)

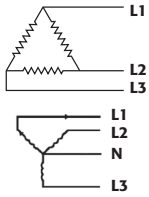

ProSeries XTP is compatible with both Delta and Wye electrical configuration requirements.
When installing a ProSeries XTP to a Wye electrical configuration, the neutral leg is not used.

Intertek

NO LEAD*
*The wetted surface of this product contacted by water contains less than 0.25% lead and meets NSF/ANSI 372

LOW LEAD CONTENT

Special Design Service

- Inquiries for units for unique applications are welcome. Call our Technical Service department at **1 800 543 6163.**
- Custom orders non-refundable

Suggested Specification

Tankless water heater shall be an Eemax model number _____.

Factory installation in a _____(N4/N4X/N4X6) enclosure.

Enclosure to be fitted with the following features:

_____ **FP**	Freeze protection (-30°F)
_____ **EDS**	Non-fused disconnect
_____ **FDS**	Fused disconnect
_____ **EP**	Explosion proof (C1D2 compliant)
_____ **GFCI**	True RMS GFCI with digital display and reset
_____ **SK**	24" legs for free standing applications
_____ **SB**	Siren and Beacon
_____ **DC**	Dry contact
_____ **ES**	Emergency stop - push button
EX68031-16	Disconnect Switch (see page 38-41) Note that this disconnect is applicable to NON-NEMA cabinet installations only

Tankless water heater must be constructed with NSF 372 listed materials. Unit to accommodate vertical (upright) or horizontal mounting orientations. Heating element to be sheathed, copper cartridge style, designed for field replacement. Tankless water heater to use 4 line, 20 character LED digital display. Display to include selectable Celsius / Fahrenheit, inlet temperature, outlet temperature, and set point temperature. Display to be capable of relaying flow rate in gallons per minute or liters per minute. Diagnostic features to include error and fault code notifications via digital display. Control board to maintain error/fault history. Water heater must be protected by redundant safeties and to include integrated flow meter that will ensure accurate turn-on /turn-off flow rate. Unit shall have a 0.5 GPM turn on flow. Water heater shall modulate power to the heating elements to maintain a users elected output temperature between 60 - 180°F (subject to incoming water temperature). The unit shall be equipped with both computer controlled and electromechanical thermostat switches for high-limited temperature protection. Maximum operating pressure of 150 PSI. The water heater shall be fitted with 3/4" NPT fittings. Heater shall employ technology that engages upon start-up to avoid dry-fire occurrence. Unit shall be Eemax or approved equal.

Information and product specifications contained in this document are subject to change without notice. REV 2026

ProSeries XTP™

Thermostatic Water Heater for Commercial and Industrial Applications

MODEL NUMBER	kW	AMPS PER PHASE	TURN ON (GPM)	RECOMMENDED WIRE SIZE (90° C/CU)	TEMPERATURE RISE °F 1.0 GPM	2.0 GPM	3.0 GPM	4.0 GPM	5.0 GPM	6.0 GPM	7.0 GPM	8.0 GPM	9.0 GPM	10.0 GPM
VOLTS 208														
XTP018208	18	50	0.5	8 AWG	123°	60°	40°	30°	24°	20°	17°	15°	13°	12°
XTP024208	24	67	0.5	4 AWG	†	82°	55°	41°	33°	27°	23°	20°	18°	16°
XTP032208	31.2	87	0.5	3 AWG	†	107°	71°	53°	43°	36°	30°	27°	24°	21°
VOLTS 480														
XTP016480	16	19	0.5	12 AWG	109°	55°	36°	27°	22°	18°	16°	14°	12°	11°
XTP020480	20	24	0.5	10 AWG	137°	68°	46°	34°	27°	23°	20°	17°	15°	14°
XTP024480	24	29	0.5	10 AWG	†	82°	55°	41°	33°	27°	23°	20°	18°	16°
XTP027480	27	33	0.5	8 AWG	†	92°	61°	46°	37°	31°	26°	23°	20°	18°
XTP036480	36	43	0.5	8 AWG	†	126°	84°	63°	51°	42°	36°	32°	28°	25°
XTP048480	48	58	0.5	8 AWG	†	†	109°	82°	66°	55°	47°	41°	36°	33°
XTP054480	54	65	0.5	6 AWG	†	†	123°	92°	74°	61°	53°	46°	41°	37°

† Temperature electronically limited to factory preset temperature.
"C" indicates evaluation and compliance to either Underwriters Laboratories (UL) or Intertek (ETL) under CAN/CSA-22.2 No. 64/No. 88.

Base Model Dimensions

Est. weight 36 lb. Designed for wall mounted installation.

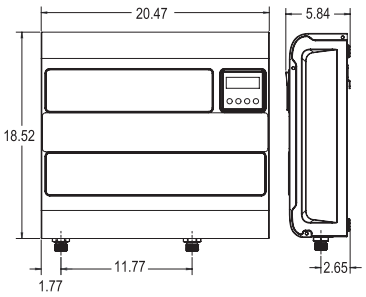

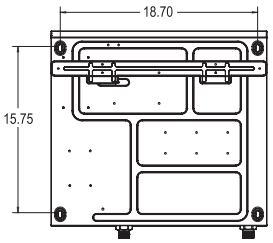

Wall Bracket Dimensions

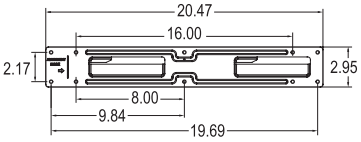

NEMA Cabinet Options*

Dimensions: 24"H x 30"W x 13.5"D

N4 Powder coated steel

N4X Corrosion-resistant 304 stainless steel

N4X6 Corrosion-resistant 316 stainless steel

Est. total weight 130 lb. Designed for wall mounted installation.

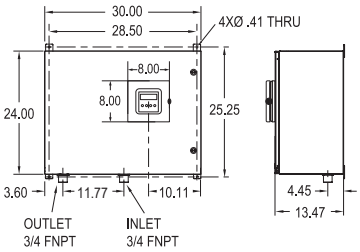

NEMA Cabinet Options and Accessories

Dimensions: 36"H x 30"W x 17.3"D

N4 Powder coated steel

N4X Corrosion-resistant 304 stainless steel

N4X6 Corrosion-resistant 316 stainless steel

These options require the large cabinet:

FP Freeze protection (-30°F)

EDS Non-fused disconnect

FDS Fused disconnect

EP Explosion proof purge kit and vent (C1D2 compliant)

GFCI True RMS GFCI with digital display and reset

SK 24" legs for free standing applications

SB Siren and Beacon

DC Dry contact

ES Emergency stop - push button

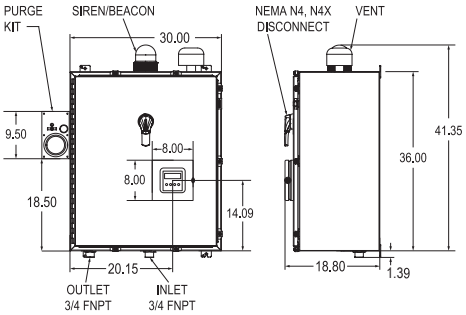

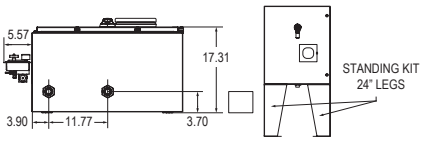

Est. total weight 195 lb, varies based on options. Designed for wall mounted installation. Free standing legs and other options available.

*Refer to page 47 of this specification guide for more details regarding selection.

Disconnect Switch Applications

EX68031-15	EX68031-16
XTP016480, XTP020480, XTP024480	XTP018208, XTP027480, XTP036480, XTP048480

Series Two™, "TC"

Staged Models (Two Heating Modules) with Thermostatic Control

Applications

- Single or multi-fixture
- Commercial/Industrial
- Adjustable temperature setting with +/–1°F temperature stability
- Solar backup with FS option

Features

- Turns on in stages based on hot water demand
- On demand hot water
- Continuous hot water. No storage capacity to run out
- Reduces installation cost and material. No T&P relief valve needed (check local codes) or venting
- Easy installation with integral 3/4" NPT fittings
- Cut energy waste. Flow switch activates heater only on demand (no standby heat loss)
- Two glass-fiber reinforced heater bodies and nichrome elements – a unique, patented flow path ensures optimum heat transfer and extended element life
- Warranty, five (5) years limited on leaks, one (1) year parts
- Field serviceable replaceable cartridge element
- Unit mounts on wall
- High temperature limit switch

Optional Features

- Factory set ambient to 180°F (FS)
- Multi lavs 0.3 turn on. Staged up to 4 lavs 105°F-110°F temp setting (ML)
- Sanitation 180°F (S)
- N4, N4X (304SS) enclosures

Product Specifications

Dimensions:	10.25" x 10.75" x 4.5"
Weight:	10.5 lb
Cover:	Enameled steel
Color:	White
Element:	Dual replacement cartridge inserts Thermostatic control (+/-1°F) accuracy at steady state
Fittings:	3/4" NPT fittings at bottom of unit
Min. Operating Pressure:	40 PSI
Max. Operating Pressure:	150 PSI
UL listed file number:	E86887

U.S. Patent #'s: 4,762,980 and 4,960,976

Special Design Service

Inquiries for units for unique applications are welcome.
Call our Technical Service department at **1 800 543 6163**.

NO LEAD*
*The wetted surface of this product contacted by water contains less than 0.25% lead and meets NSF/ANSI 372

LOW LEAD CONTENT

bimobject
Find our products on
bimobject.com
BIM

Suggested Specification

Tankless water heater shall be an Eemax Series Two model number EX_____.

Heater shall have two heating modules. Element shall be replaceable cartridge insert. Unit shall have a replaceable filter in the inlet connector. Heater shall be fitted with 3/4" NPT water connections. Maximum operating pressure of 150 PSI. Hot water storage tanks prohibited. Unit shall be Eemax or approved equal.
NOTE: Refer to rating chart for product information.

Heater available with the following features:

_____ **FS**	Factory set to a prespecified target temperature between 95°F - 180°F
_____ **ML**	Multi lavs 0.3 turn on. Staged up to 4 lavs 110°F temp setting
_____ **S**	Sanitation 180°F
_____ **N4**	NEMA 4 steel cabinet with powder coat finish
_____ **N4X**	NEMA 4 stainless steel, corrosion-resistant cabinet

NOTE: Unit should not be used in a recirculation application. Contact an EEMAX representative for alternative recommendations.

Information and product specifications contained in this document are subject to change without notice. REV 2026

Series Two™, "TC"

Staged Models (Two Heating Modules) with Thermostatic Control

Specifications
Tankless Electric Water Heater

Suffix Definitions

FS Factory set up to 180°F

ML "ML" 0.3 turn on. Staged up to 4 lavs 105°F - 110°F temp setting, aerators supplied

S Sanitation 180°F

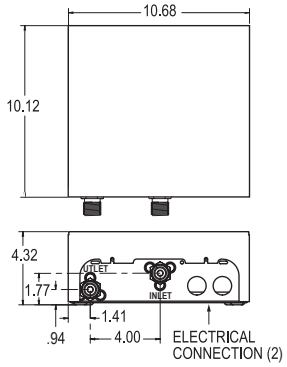

NEMA 4/4X

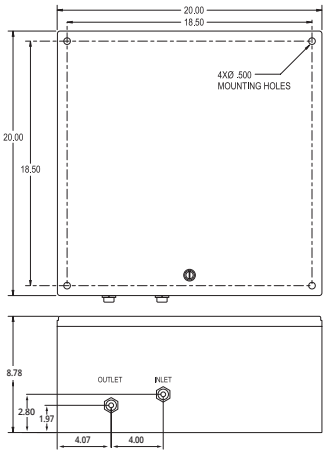

	MODEL NUMBER	kW	TOTAL AMP DRAW	CIRCUITS REQUIRED X BREAKER SIZE	TURN ON (GPM)	RECOMMENDED WIRE SIZE (75° C/CU)	MAX FLOW GPM	TEMPERATURE RISE °F 1.5 GPM	2.0 GPM	2.5 GPM	3.0 GPM
	VOLTS 240 Single Phase††										
C	**EX144TC**	15.0	64	(2x40)	0.7	10 AWG	3.0	68°	51°	41°	34°
C	**EX144TC** (derated 208V performance)	11.2	54	(2x40)	0.7	10 AWG	3.0	51°	38°	31°	26°
C	**EX144TC S**	15.0	64	(2x40)	0.7	10 AWG	3.0	68°	51°	41°	34°
C	**EX144TC ML**	15.0	64	(2x40)	0.3	10 AWG	3.0	68°	51°	41°	34°
C	**EX144TC FS**	15.0	64	(2x40)	0.7	10 AWG	3.0	68°	51°	41°	34°
C	**EX190TC**	19.0	80	(2x40)	0.7	8 AWG	3.0	87°	65°	52°	43°
C	**EX190TC** (derated 208V performance)	13.7	66	(2x40)	0.7	8 AWG	3.0	63°	47°	38°	31°
C	**EX190TC S**	19.0	80	(2x40)	0.7	8 AWG	3.0	87°	65°	52°	43°
C	**EX190TC FS**	19.0	80	(2x40)	0.7	8 AWG	3.0	87°	65°	52°	43°
C	**EX190TC ML**	19.0	80	(2x40)	0.3	8 AWG	3.0	87°	65°	52°	43°
	EX023240TC	23.0	96	(2x50)	0.7	8 AWG	3.0	105°	79°	63°	52°
	EX023240TC (derated 208V performance)	17.3	83	(2x50)	0.7	8 AWG	3.0	79°	59°	47°	39°
	EX023240TC S	23.0	96	(2x50)	0.7	8 AWG	3.0	105°	79°	63°	52°
	EX023240TC FS	23.0	96	(2x50)	0.7	8 AWG	3.0	105°	79°	63°	52°
	EX023240TC ML	23.0	96	(2x50)	0.3	8 AWG	3.0	105°	79°	63°	52°
	VOLTS 208 Single Phase††										
C	**EX1608TC**	16.6	80	(2x40)	0.7	8 AWG	3.0	76°	57°	45°	38°
C	**EX1608TC S**	16.6	80	(2x40)	0.7	8 AWG	3.0	76°	57°	45°	38°
C	**EX1608TC FS**	16.6	80	(2x40)	0.7	8 AWG	3.0	76°	57°	45°	38°
C	**EX1608TC ML**	16.6	80	(2x40)	0.3	8 AWG	3.0	76°	57°	45°	38°
	VOLTS 277 Single Phase										
	EX160TC	16.0	58	(2x30)	0.7	10 AWG	3.0	73°	55°	44°	36°
	EX160TC S	16.0	58	(2x30)	0.7	10 AWG	3.0	73°	55°	44°	36°
	EX160TC FS	16.0	58	(2x30)	0.7	10 AWG	3.0	73°	55°	44°	36°
	EX160TC ML	16.0	58	(2x30)	0.3	10 AWG	3.0	73°	55°	44°	36°
	EX200TC	20.0	72	(2x40)	0.7	8 AWG	3.0	91°	68°	55°	46°
	EX200TC S	20.0	72	(2x40)	0.7	8 AWG	3.0	91°	68°	55°	46°
	EX200TC FS	20.0	72	(2x40)	0.7	8 AWG	3.0	91°	68°	55°	46°
	EX200TC ML	20.0	72	(2x40)	0.3	8 AWG	3.0	91°	68°	55°	46°

* 240V units can be used on 208V single phase with approximately 25% reduced kilowatt output. Please note per UL standards the rating plate and installation instructions will all be according to a 240V applied voltage. Check with local officials prior to derating the electrical infrastructure.

"C" indicates evaluation and compliance to either Underwriters Laboratories (UL) or Intertek (ETL) under CAN/CSA-C22.2 No. 64/No. 88.

†† ATTENTION: Under no circumstances can Series Two be connected to a 208 V or 240 V three phase load center. Connection to any three phase load center will void all warranty coverage.

NOTE: Unit should not be used in a recirculation application. Contact an EEMAX representative for alternative recommendations.

Series Two™, "T2"

Parallel Models (Two Heating Modules) with Thermostatic Control

Applications

- Single high volume fixture
- Commercial/Industrial
- Adjustable temperature setting with +/–1°F temperature stability

Features

- Parallel turn on
- On demand hot water
- Continuous hot water. No storage capacity to run out
- Reduces installation cost and material. No T&P relief valve needed (check local codes) or venting
- Easy installation with integral 3/4" NPT fittings
- Cut energy waste. Flow switch activates heater only on demand (no standby heat loss)
- Meets ANSI Z358.1 tepid water requirement (EE option)
- Two glass reinforced heater bodies and Nichrome elements – a unique, patented flow path ensures optimum heat transfer and extended element life
- Warranty, five (5) years limited on leaks, one (1) year parts
- Field serviceable replaceable cartridge element
- Unit mounts on wall
- High temperature limit switch

Optional Features

- Emergency eye/face wash ANSI Z358.1 (EE)
- Factory set up to 180°F (60°F-180°F) (FS)
- Sanitation 180°F (S)
- N4, N4X (304SS) enclosures

Product Specifications

Dimensions:	10.25" x 10.75" x 4.5"
Weight:	10.5 lb
Cover:	Enameled steel
Color:	White
Element:	Dual replacement cartridge inserts Thermostatic control (+/-1°F) accuracy at steady state
Fittings:	3/4" NPT fittings at bottom of unit
Min. Operating Pressure:	40 PSI
Max. Operating Pressure:	150 PSI
UL listed file number:	E86887

U.S. Patent #'s: 4,762,980 and 4,960,976

Special Design Service

Inquiries for units for unique applications are welcome.
Call our Technical Service department at **1 800 543 6163**.

NO LEAD*
*The wetted surface of this product contacted by water contains less than 0.25% lead and meets NSF/ANSI 372

LOW LEAD CONTENT

bimobject
Find our products on
bimobject.com
BIM

Suggested Specification

Tankless water heater shall be an Eemax Series Two model number EX_____.

Heater shall have two heating modules. Element shall be replaceable cartridge insert. Unit shall have a replaceable filter in the inlet connector. Heater shall be fitted with 3/4" NPT water connections. Maximum operating pressure of 150 PSI. Hot water storage tanks prohibited. Unit shall be Eemax or approved equal.

Heater available with the following features:

_____	**EE**	Emergency Eyewash. Meets ANSI tepid water requirements. Max. temperature of 90°F
_____	**FS**	Factory set to a prespecified target temperature between 95°F -180°F
_____	**S**	Sanitation 180°F
_____	**N4**	NEMA 4 steel cabinet with powder coat finish
_____	**N4X**	NEMA 4 stainless steel, corrosion-resistant cabinet

NOTE: Unit should not be used in a recirculation application. Contact an EEMAX representative for alternative recommendations.

Information and product specifications contained in this document are subject to change without notice. REV 2026

Series Two™, "T2"

Parallel Models (Two Heating Modules) with Thermostatic Control

Specifications
Tankless Electric Water Heater

Suffix Definitions

EE Meets ANSI Z358.1 emergency eye/face wash tepid water requirements

FS Factory set up to 180°F

S Sanitation 180°F

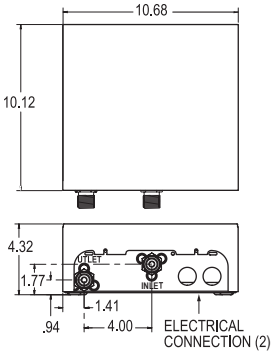

NEMA 4/4X

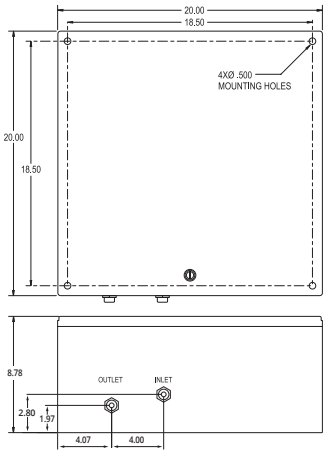

	MODEL NUMBER	kW	TOTAL AMP DRAW	CIRCUITS REQUIRED X BREAKER SIZE	TURN ON (GPM)	RECOMMENDED WIRE SIZE (75° C/CU)	MAX FLOW GPM	TEMPERATURE RISE °F 1.5 GPM	2.0 GPM	2.5 GPM	3.0 GPM	4.0 GPM
	VOLTS 240* Single Phase††											
C	**EX144T2**	15.0	64	(2x40)	1.5	10 AWG	4.0	68°	51°	41°	34°	26°
	EX144T2 (derated 208V performance)	11.2	54	(2x40)	1.5	10 AWG	4.0	51°	38°	31°	26°	19°
C	**EX144T2 EE**	15.0	64	(2x40)	1.5	10 AWG	4.0	†	51°	41°	34°	26°
C	**EX144T2 FS**	15.0	64	(2x40)	1.5	10 AWG	4.0	68°	51°	41°	34°	26°
C	**EX144T2 S**	15.0	64	(2x40)	1.5	10 AWG	4.0	68°	51°	41°	34°	26°
C	**EX190T2**	19.0	80	(2x40)	1.5	8 AWG	4.0	87°	65°	52°	43°	32°
	EX190T2 (derated 208V performance)	13.7	66	(2x40)	1.5	8 AWG	4.0	63°	47°	38°	31°	24°
C	**EX190T2 EE**	19.0	80	(2x40)	1.5	8 AWG	4.0	†	†	52°	43°	32°
C	**EX190T2 FS**	19.0	80	(2x40)	1.5	8 AWG	4.0	87°	65°	52°	43°	32°
C	**EX190TC ML**	19.0	80	(2x40)	1.5	8 AWG	4.0	87°	65°	52°	43°	32°
	EX023240T2	23.0	96	(2x50)	1.5	8 AWG	4.0	105°	79°	63°	52°	39°
	EX023240T2 (derated 208V performance)	17.3	83	(2x50)	1.5	8 AWG	4.0	79°	59°	47°	39°	30°
	EX023240T2 EE	23.0	96	(2x50)	1.5	8 AWG	4.0	†	†	†	52°	39°
	EX023240T2 FS	23.0	96	(2x50)	1.5	8 AWG	4.0	105°	79°	63°	52°	39°
	EX023240T2 S	23.0	96	(2x50)	1.5	8 AWG	4.0	105°	79°	63°	52°	39°
	VOLTS 208 Single Phase††											
C	**EX1608T2**	16.6	80	(2x40)	1.5	8 AWG	4.0	76°	57°	45°	38°	28°
C	**EX1608T2 EE**	16.6	80	(2x40)	1.5	8 AWG	4.0	†	57°	45°	38°	28°
C	**EX1608T2 FS**	16.6	80	(2x40)	1.5	8 AWG	4.0	76°	57°	45°	38°	28°
C	**EX1608T2 S**	16.6	80	(2x40)	1.5	8 AWG	4.0	76°	57°	45°	38°	28°
	VOLTS 277 Single Phase											
	EX160T2	16.0	58	(2x30)	1.5	10 AWG	4.0	73°	55°	44°	36°	27°
	EX160T2 EE	16.0	58	(2x30)	1.5	10 AWG	4.0	†	55°	44°	36°	27°
	EX160T2 FS	16.0	58	(2x30)	1.5	10 AWG	4.0	73°	55°	44°	36°	27°
	EX160T2 S	16.0	58	(2x30)	1.5	10 AWG	4.0	73°	55°	44°	36°	27°
	EX200T2	20.0	72	(2x40)	1.5	8 AWG	4.0	91°	68°	55°	46°	34°
	EX200T2 EE	20.0	72	(2x40)	1.5	8 AWG	4.0	†	†	55°	46°	34°
	EX200T2 FS	20.0	72	(2x40)	1.5	8 AWG	4.0	91°	68°	55°	46°	34°
	EX200T2 S	20.0	72	(2x40)	1.5	8 AWG	4.0	91°	68°	55°	46°	34°

* 240V units can be used on 208V single phase with approximately 25% reduced kilowatt output. Please note per UL standards the rating plate and installation instructions will all be according to a 240V applied voltage. Check with local officials prior to derating the electrical infrastructure.

† Temperature electrically limited to factory preset temperature.

"C" indicates evaluation and compliance to either Underwriters Laboratories (UL) or Intertek (ETL) under CAN/CSA-C22.2 No. 64/No. 88.

†† ATTENTION: Under no circumstances can Series Two be connected to a 208 V or 240 V three phase load center. Connection to any three phase load center will void all warranty coverage.

NOTE: Unit should not be used in a recirculation application. Contact an EEMAX representative for alternative recommendations.

Series Three™

Staged or Parallel Models (Three Heating Modules) Thermostatic Control

Applications

- Residential or commercial multi-fixture unit with capacity up to 5 GPM

Features

- On demand hot water. Cuts energy waste. No stand-by heat loss.
- Thermostatic control. Microprocessor provides stable outlet temperatures
- Regulates power to required flow
- Continuous hot water. No storage capacity to run out
- Reduces installation cost and material. Requires only one cold water input line, no solder connections. No T&P relief valve needed (check local codes) or venting
- Easy installation with integral 3/4" NPT fittings
- Three glass-fiber reinforced heater bodies and Nichrome elements – a unique, patented flow path ensures optimum heat transfer and extended element life
- Warranty, five (5) years limited on leaks, one (1) year parts
- Field serviceable replaceable cartridge element

Optional Features

- T2T – Staged heating elements
- T3 – Parallel heating elements. Recommended for commercial uses only
- Factory set up to 180° (FS)
- "ML" 0.3 turn on. Staged up to 4 lavs 105°F - 110°F temp setting, aerators supplied (ML)
- Sanitation 180F° (S)
- N4, N4X (304SS) enclosures

Product Specifications

Dimensions:	15.25" x 12.25" x 4.5"
Weight:	15 lb
Cover:	Enameled steel
Color:	White
Element:	Triple replaceable cartridge inserts. Thermostatic control (+/-1°F) accuracy at steady state
Fittings:	3/4" NPT at bottom of unit
Min. Operating Pressure:	45 PSI
Max. Operating Pressure:	150 PSI
UL listed file number:	E86887

U.S. Patent #'s: 4,762,980 and 4,960,976

Special Design Service

Inquiries for units for unique applications are welcome.
Call our Technical Service department at **1 800 543 6163**.

NO LEAD*
*The wetted surface of this product contacted by water contains less than 0.25% lead and meets NSF/ANSI 372

LOW LEAD CONTENT

bimobject
Find our products on
bimobject.com
BIM

Suggested Specification

Tankless water heater shall be an Eemax Series Three model number EX280_____.

Element shall be field serviceable, replaceable cartridge insert. Unit shall have a replaceable filter in the inlet connector. Heater shall be fitted with 3/4" NPT water connections. Maximum operating pressure of 150 PSI. Hot water storage tanks prohibited. Unit shall be Eemax or approved equal.

NOTE: Refer to rating chart for product information.

Enclosure to be fitted with the following features:

_____ **FS**	Factory set to a prespecified target temperature between 95°F -180°F
_____ **ML**	"ML" 0.3 turn on. Staged up to 4 lavs 105°F - 110°F temp setting, aerators supplied
_____ **S**	Sanitation 180°F
_____ **N4**	NEMA 4 steel cabinet with powder coat finish
_____ **N4X**	NEMA 4 stainless steel, corrosion-resistant cabinet

NOTE: Unit should not be used in a recirculation application. Contact an EEMAX representative for alternative recommendations.

Information and product specifications contained in this document are subject to change without notice. REV 2026

Series Three™

Staged or Parallel Models (Three Heating Modules) Thermostatic Control

Suffix Definitions

T2T Staged heating elements

T3 Parallel heating elements

FS Factory set to a prespecified target temperature between 95°F -180°F

ML "ML" 0.3 turn on. Staged up to 4 lavs 105°F - 110°F temp setting, aerators supplied

S Sanitation 180°F

	MODEL NUMBER	kW	TOTAL AMP DRAW	CIRCUITS REQUIRED X BREAKER SIZE	TURN ON (GPM)	RECOMMENDED WIRE SIZE (75° C/CU)	MAX FLOW GPM	TEMPERATURE RISE °F 2.5 GPM	3.0 GPM	4.0 GPM	5.0 GPM
	VOLTS 240* Single Phase††										
C	**EX280T2T**	28.5	119	(3X40)	0.7	8 AWG	4.0	78°	65°	49°	–
C	**EX280T2T** (derated 208V performance)	20.6	99	(3X40)	0.7	8 AWG	4.0	56°	47°	35°	–
C	**EX280T2T ML**	28.5	119	(3X40)	0.3	8 AWG	4.0	78°	65°	49°	–
C	**EX280T2T FS**	28.5	119	(3X40)	0.7	8 AWG	4.0	78°	65°	49°	–
C	**EX280T2T S**	28.5	119	(3X40)	0.7	8 AWG	4.0	78°	65°	49°	–
C	**EX280T3**	28.5	119	(3X40)	2.0	8 AWG	5.0	78°	65°	49°	39°
C	**EX280T3** (derated 208V performance)	20.6	99	(3X40)	2.0	8 AWG	5.0	56°	47°	35°	28°
C	**EX280T3 S**	28.5	119	(3X40)	2.0	8 AWG	5.0	78°	65°	49°	39°
C	**EX280T3 FS**	28.5	119	(3X40)	2.0	8 AWG	5.0	78°	65°	49°	39°

* 240V units can be used on 208V single phase with approximately 25% reduced kilowatt output. Please note per UL standards the rating plate and installation instructions will all be according to a 240V applied voltage. Check with local officials prior to derating the electrical infrastructure.
"C" indicates evaluation and compliance to either Underwriters Laboratories (UL) or Intertek (ETL) under CAN/CSA-C22.2 No. 64/No. 88.
† † ATTENTION: Under no circumstances can Series Three be connected to a 208 V or 240 V three phase load center. Connection to any three phase load center will void all warranty coverage.

"EX"

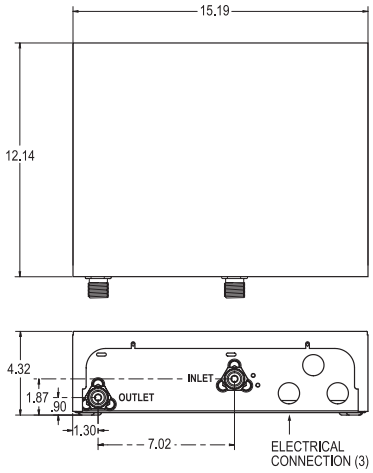

NEMA 4/4X

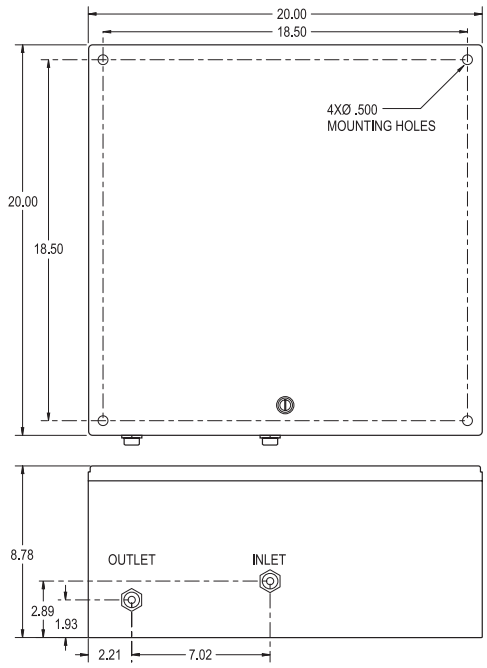

NOTE: Unit should not be used in a recirculation application. Contact an EEMAX representative for alternative recommendations.

AutoBooster™

Increase Deliverable Hot Water Capacity of a Tank Water Heater

Applications

- Electric tank in residential & commercial settings using existing tank electrical feed
- Gas tank in residential & commercial settings (requires separate power supply)

Features

- Increase deliverable hot water up to 45%
- Compact design
- Set temperature in increments of +/–1°F
- External controls for adjustable settings
- Digital user interface
- Easy installation on new or existing tank water heater
- No need for additional electrical infrastructure when used with an existing electric water heater
- Field replaceable element
- ETL certified for USA and Canada to UL499
- Warranty, five (5) years limited on leaks, one (1) year parts

Intertek

NO LEAD*
*The wetted surface of this product contacted by water contains less than 0.25% lead and meets NSF/ANSI 372

C US
LOW LEAD CONTENT

AHRI CERTIFIED

bimobject
Find our products on
bimobject.com
BIM

Product Specifications

Dimensions:	8″ x 11.5″ x 3.75″
Weight:	5.8 lb
Voltage:	240
Power:	7.2 kW
Max. Amperage:	30A
Recommended Wire Size:	10AWG ~(3′ provided)
Outlet Temperature Range:	80-140°F
Min. Operating Pressure:	25 PSI
Max. Operating Pressure:	150 PSI
Water Connections:	Inlet: 3/4″ NPT female Outlet: 3/4″ NPT male

U.S. Patent #: US20160178234

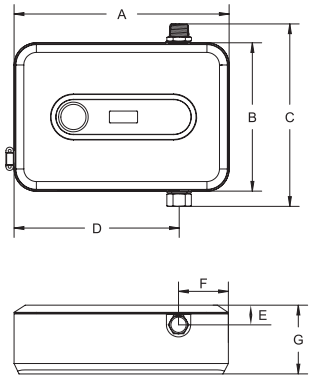

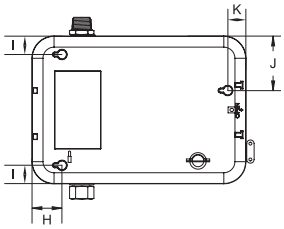

Dimensions	Imperial	Metric
A	11.4-in.	290-mm
B	7.9-in.	200-mm
C	9.7-in.	246-mm
D	8.8-in.	224-mm
E	1.0-in.	26-mm
F	2.7-in.	67-mm
G	3.7-in.	94-mm
H	1.6-in.	41-mm
I	1.0-in.	25-mm
J	2.9-in.	74-mm
K	1.0-in.	25-mm

Suggested Specification

Water heater shall be an Eemax AutoBooster model number HATB007240.

Eemax AutoBooster to be connected to a tank water heater for increased hot water delivery. AutoBooster to utilize existing electrical infrastructure of electric tank water heater. Water Heater Booster compatible with gas tank water heater using dedicated 30 amp breaker. AutoBooster to be mounted in horizontal orientation with inlet on the bottom and outlet on the top. AutoBooster water connections are Inlet 3/4″ FNPT, and outlet 3/4″ MNPT. AutoBooster may be wall mounted if available space is limited.

NOTE: Unit should not be used in a recirculation application. Contact an EEMAX representative for alternative recommendations.

Information and product specifications contained in this document are subject to change without notice. REV 2026

AutoBooster™

Increase Deliverable Hot Water Capacity of a Tank Water Heater

Specifications
Tankless Electric Water Heater

MODEL NUMBER	kW	TOTAL AMP DRAW	CIRCUITS REQUIRED X BREAKER SIZE	INLET FITTING	OUTLET FITTING	TURN ON (GPM)	TEMPERATURE RISE °F 0.5 GPM	1.0 GPM	1.5 GPM	2.0 GPM	2.5 GPM
VOLTS 240*											
C **HATB007240**	7.2	30	(1x30)	3/4" FNPT	3/4" MNPT	0.3	98°	49°	33°	25°	20°
C **HATB007240** (derated 208V performance)	5.4	26	(1x30)	3/4" FNPT	3/4" MNPT	0.3	73°	37°	24°	18°	15°

* 240V units can be used on 208V single phase with approximately 25% reduced kilowatt output. Please note per UL standards the rating plate and installation instructions will all be according to a 240V applied voltage. Check with local officials prior to derating the electrical infrastructure.

"C" indicates evaluation and compliance to either Underwriters Laboratories (UL) or Intertek (ETL) under CAN/CSA-C22.2 No. 64/No. 88.

Install on existing electric tank hot water outlet.

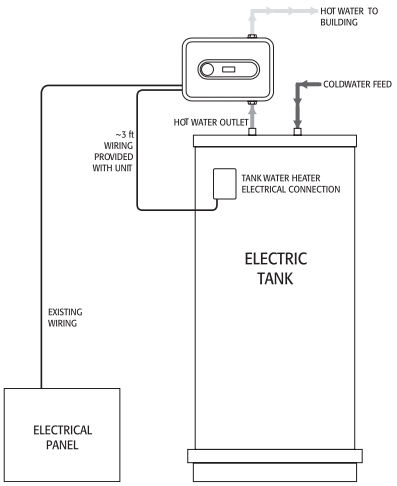

Install on gas tank hot water outlet.

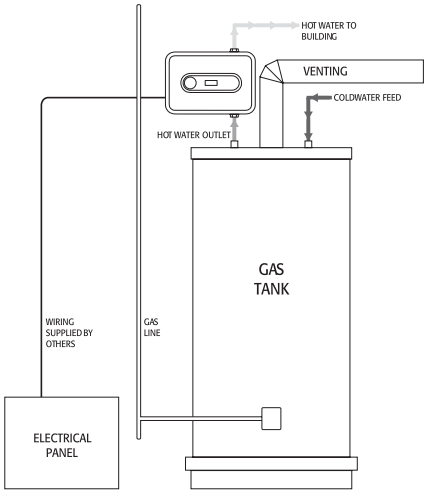

NOTE: Unit may be wall mounted if available space is limited.

NOTE: Unit should not be used in a recirculation application. Contact an EEMAX representative for alternative recommendations.

NOTE: This unit should not to be used with HeatPump and/or tanks with Wi-fi connections (SmartElectric). Contact an Eemax representative for guidance.

HomeAdvantage II™

For Single Point-of-Use or Multiple Applications

Applications

▪ Showerheads	2.0 GPM max*
▪ Low-flow Shower Heads	1.8 GPM max**
▪ Kitchen Faucets (residential)	1.8 GPM max*
▪ Lavatory Faucets (residential)	1.5 GPM max*
	0.5 GPM max*

* as per 2021 Uniform Plumbing Code guidelines
** as per 2022 California Green Buildings Standards Code

Features

- Instant, consistent and endless hot water
- Compact, resistant and stylish with digital temperature control in increments of 1° ranging from 80°F to 140°F
- Copper immersion heating elements with brass top increase durability and are threaded for easy replacement
- Simple Installation
- Digital temperature display
- External controls to adjust temperature

Special Design Service

Inquiries for units for unique applications are welcome.
Call our Technical Service department at **1 800 543 6163.**

Suggested Specification

Tankless water heater shall be an Eemax HomeAdvantage II model number HA_____.

Unit shall have copper clad immersion heating element(s) with brass terminations for increased durability. External temperature control and display adjustable in 1° increments with a range of 80°-140°F. Display shall be capable of displaying setpoint temperature in Celsius or Fahrenheit temperature scales. Unit shall utilize a flow meter with a 0.3 GPM activation point and manage power based on actual flow rate and inlet temperature. Values should be processed 60 times per second. Unit shall be certified lead free, certified to UL499 and CSA-C22.2 No. 64.

Eemax Inline Flow Regulator

- See page 15

HA008240/HA011240/HA013240

HA018240

HA024240/HA027240

HA036240

Intertek

NO LEAD*
*The wetted surface of this product contacted by water contains less than 0.25% lead and meets NSF/ANSI 372

bimobject
Find our products on
bimobject.com
BIM

AHRI CERTIFIED®
www.ahridirectory.org
Globally Recognized. Industry Respected.

C US
LOW LEAD CONTENT

Information and product specifications contained in this document are subject to change without notice. REV 2026

HomeAdvantage II™

For Single Point-of-Use or Multiple Applications

Specifications
Tankless Electric Water Heater

	MODEL NUMBER	kW	TOTAL AMP DRAW	CIRCUITS REQUIRED X BREAKER SIZE	TURN ON (GPM)	RECOMMENDED WIRE SIZE (75° C/CU)	MAX FLOW GPM	TEMPERATURE RISE °F 0.5 GPM	1.0 GPM	1.5 GPM	2.0 GPM	2.5 GPM	3.0 GPM	4.0 GPM	5.0 GPM	6.0 GPM
	VOLTS 240*††															
C	**HA008240**	8.0	33	(1x40)	0.3	8 AWG	4.8	109°	55°	36°	27°	22°	18°	14°	–	–
C	**HA008240** (derated 208V performance)	6.0	29	(1x40)	0.3	8 AWG	4.8	82°	41°	27°	20°	16°	14°	10°	–	–
C	**HA011240**	11.0	46	(1x50)	0.3	8 AWG	4.8	†	75°	50°	38°	30°	25°	19°	–	–
C	**HA011240** (derated 208V performance)	8.3	40	(1x50)	0.3	8 AWG	4.8	†	56°	38°	28°	23°	19°	14°	–	–
C	**HA013240**	13.0	54	(1x60)	0.3	6 AWG	4.8	†	89°	59°	44°	36°	30°	22°	–	–
C	**HA013240** (derated 208V performance)	9.8	47	(1x60)	0.3	6 AWG	4.8	†	67°	45°	34°	27°	22°	17°	–	–
C	**HA018240**	18.0	75	(2x40)	0.3	8 AWG	7.0	†	†	82°	61°	49°	41°	31°	25°	20°
C	**HA018240** (derated 208V performance)	13.5	65	(2x40)	0.3	8 AWG	7.0	†	92°	62°	46°	37°	31°	23°	18°	15°
C	**HA024240**	24.0	100	(3x40)	0.3	8 AWG	7.0	†	†	109°	82°	66°	55°	41°	33°	27°
C	**HA024240** (derated 208V performance)	18	87	(3x40)	0.3	8 AWG	7.0	†	†	82°	62°	49°	41°	31°	25°	21°
C	**HA027240**	27.0	113	(3x40)	0.3	8 AWG	7.0	†	†	†	92°	74°	61°	46°	37°	31°
C	**HA027240** (derated 208V performance)	20.3	98	(3x40)	0.3	8 AWG	7.0	†	†	92°	69°	55°	46°	35°	28°	23°
C	**HA036240**	36.0	150	(4x40)	0.3	8 AWG	8.0	†	†	†	†	98°	82°	61°	49°	41°
C	**HA036240** (derated 208V performance)	27.0	130	(4x40)	0.3	8 AWG	8.0	†	†	†	92°	74°	62°	46°	37°	31°

* 240V units can be used on 208V single phase with approximately 25% reduced kilowatt output. Please note per UL standards the rating plate and installation instructions will all be according to a 240V applied voltage. Check with local officials prior to derating the electrical infrastructure.

† Temperature electronically limited setting on adjustable thermostat on front cover.

"C "indicates evaluation and compliance to either Underwriters Laboratories (UL) or Intertek (ETL) under CAN/CSA-C22.2 No. 64/No. 88.

†† **ATTENTION:** Under no circumstances can HomeAdvantage II be connected to a 208 V or 240 V three phase load center. Connection to any three phase load center will void all warranty coverage.

Product Specifications (all models)

Dynamic Operating Pressure:	25 PSI min., 150 PSI max.
Certifications:	ETL Listed to UL499 and CSA-C22.2 No. 64
Adj. Temperature Range:	80°F-140°F
Temperature Accuracy:	+/–1° at steady state

HA008240/HA011240/HA013240

Size:	11.5"H 8"W x 3.75"D
Weight:	8 kw: 4.75 lb, 11 kw/13 kw: 7 lb
Unique Features:	Welded exchanger, 1/2" compression fittings with 1/2" NPT adapters included

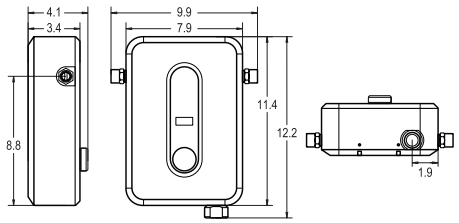

HA018240

Size:	17"H x 14"W x 3.75"D
Weight:	11.25 lb
Unique Features:	Brazed exchanger, 3/4" NPT fittings

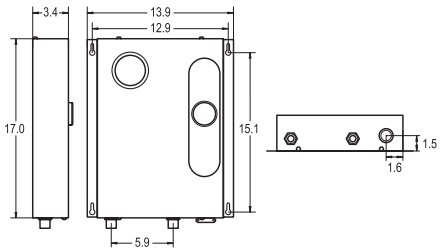

HA024240/HA027240

Size:	17"H x 17"W x 3.75"D
Weight:	13.75 lb
Unique Features:	Brazed exchanger, 3/4" NPT fittings

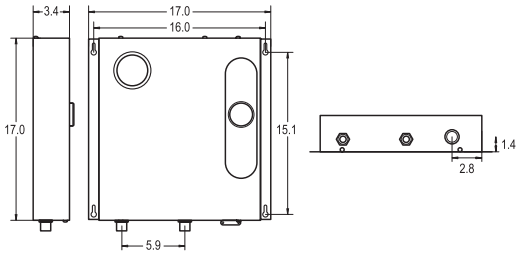

HA036240

Size:	17"H x 21"W x 3.75"D
Weight:	17.4 lb
Unique Features:	Brazed exchanger, 3/4" NPT fittings

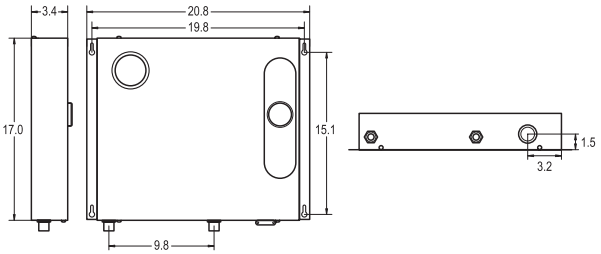

EX68031-16: Disconnect Switch Applications	**Disconnects Required**
HA008240, HA011240, HA013240	1
HA018240	2
HA024240, HA027240	3
HA036240	4

MiniTank™

1.5, 2.5, 4 and 6 Gallon MiniTanks Deliver Hot Water Efficiently

Features

- Point-of-use heating eliminates long hot water pipe runs
- Compact design fits virtually anywhere
- Replaceable magnesium anode rod
- Hot or cold water feed
- Adjustable temperature control 50°-140°F
- T&P relief valve included
- Enameled glass lined tank for extended life
- Floor and wall mountable, wall bracket included
- Field replaceable element
- ETL tested to UL 174 and NSF 372
- All units plug into standard outlets, cord included
- Single weld design
- Tank status indicator light –
  Green: ready mode
  Red: heating mode
- Warranty, six (6) years limited on leaks, two (2) years on defects

Product Specifications

Voltage:	120V
Amperage:	12 A
Heating Capacity:	1440 watts
Phase:	Single
Temperature Range:	50°F-140°F
Maximum Operating Pressure:	150 PSI

Intertek

NO LEAD*
*The wetted surface of this product contacted by water contains less than 0.25% lead and meets NSF/ANSI 372

bimobject
Find our products on bimobject.com
BIM

	Tank Volume (gal)	Weight (lb.)	Fittings	Recovery time based on 60°F rise in temperature
EMT1	1.5	11.7	1/2" NPT connections at TOP of unit	8 minutes
EMT2.5	2.5	15.5	1/2" NPT connections at TOP of unit	15 minutes
EMT4	4.0	19.3	1/2" NPT connections at TOP of unit	24 minutes
EMT6	6.0	24.9	3/4" NPT connections at TOP of unit	37 minutes

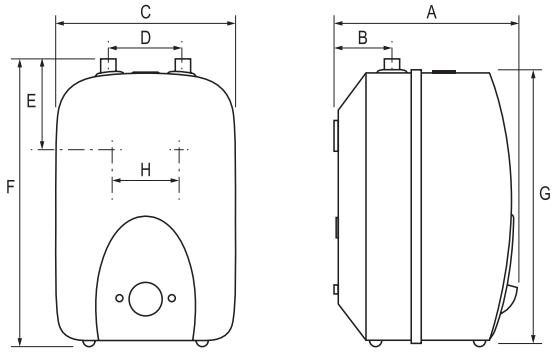

Dimensions	EMT1		EMT2.5		EMT4		EMT6	
Key	inch	mm	inch	mm	inch	mm	inch	mm
A	9.83	249.7	11.25	285.8	12.76	324.1	14.24	361.7
B	3.03	77.0	3.13	79.5	3.94	100.1	3.35	85.1
C	9.72	246.9	10.91	277.1	12.27	311.7	13.85	351.8
D	3.94	100.1	3.94	100.1	3.94	100.1	3.94	100.1
E	5.08	129.0	5.61	142.5	6.46	164.1	7.52	191.0
F	15.09	383.3	16.89	429.0	18.03	458.0	20.79	528.1
G	14.29	363.0	16.09	408.7	17.31	439.7	20.01	508.3
H*	2.52	64.0	2.52	64.0	2.52	64.0	2.52	64.0

*Mounting bracket location on the back of unit

Special Design Service

Inquiries for units for unique applications are welcome.
Call our Technical Service department at **1 800 543 6163.**

Suggested Specification

Water heater shall be an Eemax MiniTank model number EMT_____.

Unit shall be enameled glass lined with a single weld design. Water connections and supplied T&P valve to be located on top of the unit. Unit shall have a status indicator lights with adjustable thermostat. Unit to have a 6 year warranty against leaks.

Certified to UL174.

Information and product specifications contained in this document are subject to change without notice. REV 2026

MiniTank™

1.5, 2.5, 4 and 6 Gallon MiniTanks Deliver Hot Water Efficiently

Eemax MiniTank Installation

Save water by eliminating the wait for hot water to reach the faucet. Simply tap into the water line and install the heater directly at the sink. No need for costly recirculating lines and pumps. And when you want to eliminate the wait for hot water but need more volume, install the Eemax heater in-line with a larger hot water source, such as a tankless heater or a storage tank heater. Lightweight and compact.

	MODEL NUMBER	kW	TANK VOLUME	DIMENSIONS	WATER CONNECTIONS	RELIEF VALVE	SHIPPING WEIGHT	PLUG IN
	VOLTS 120							
C	**EMT1**	1.4	1.5 gallons	15" H x 9.75" W x 10" D	1/2" NPT	Included	12.5 lbs.	Yes
C	**EMT2.5**	1.4	2.5 gallons	17" H x 11" W x 11.25" D	1/2" NPT	Included	20 lbs.	Yes
C	**EMT4**	1.4	4.0 gallons	18.25" H x 12.5" W x 13" D	1/2" NPT	Included	24 lbs.	Yes
C	**EMT6**	1.4	6.0 gallons	21" H x 14" W x 14.25" D	3/4" NPT	Included	26 lbs.	Yes

"C" indicates evaluation and compliance to Intertek (ETL) under CAN/CSA-C22.2 No. 110.

Sample Installations

Standalone Point-of-Use Heating Application

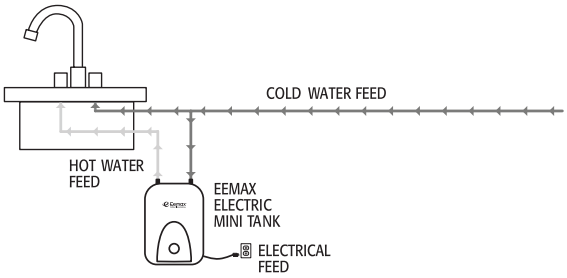

Standalone Point-of-Use Multi fixture Application

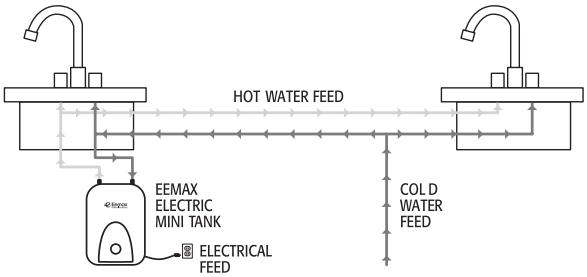

Point-of-Use Booster Heating Application from Central Tank Heating System

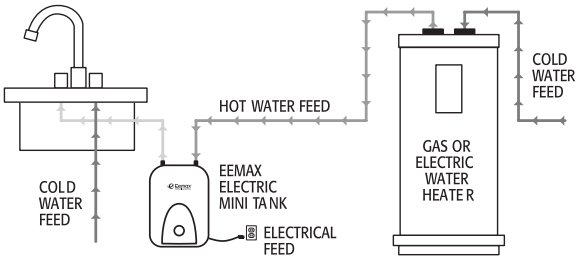

Cure for "Cold Water Sandwich" Gas Tankless Heating Application

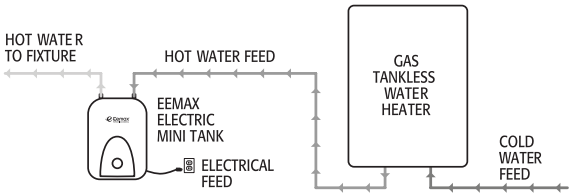

FlowCo™

Non-Thermostatic Heater for Non-Public Handwashing And Other Fixed-Flow Applications

Specifications
Tankless Electric Water Heater

Applications

- Non-public handwashing
- Point-of-use & fixed-flow fixture
- One (1) lavatory faucet, sensor faucet or metering faucet
- For thermostatic product comfort and convenience, see LavAdvantage on page 32-33. For public handwashing and UPC 407.3 compliance, see AccuMix II on pages 34-35.

Performance Features

- InfoCue™ visible LED indicator communicates system status and heater operation feedback
- SafeStart™ technology engages upon start-up to help avoid dry-fire occurrence
- Low activation flow starting at 0.2 GPM turn on (model dependent)
- Mounts in any orientation for a flexible installation
- Only one cold water line needed for an easy installation
- No T&P relief valve needed (check local codes)
- Save water and time by installing unit at the point-of-use
- Integral 3/8" compression fittings; no soldering or sweat connections required
- Control system activates heater only on demand
- High temperature limit switch enables safe operation
- 5-year limited warranty on leaks, 1-year on parts

Product Specifications

Dimensions:	10.75" H x 5.25" W x 3" D
Product Weight: (model dependent)	2.75 lb/3 lb
Cover:	ABS-UL 94 5VA
Color:	White
Min. Operating Pressure:	30 PSI
Max. Operating Pressure:	150 PSI
Element:	Replaceable nichrome cartridge insert
Fittings:	3/8" compression fittings
UL listed file number:	E86887

Special Design Service

Inquiries for units for unique applications are welcome.
Call our Technical Service department at **1 800 543 6163.**

Mount in any Orientation

SafeStart™ Technology

C UL US LISTED

C SP US LOW LEAD CONTENT

NO LEAD*
*The wetted surface of this product contacted by water contains less than 0.25% lead and meets NSF/ANSI 372

bimobject Find our products on bimobject.com BIM

AHRI CERTIFIED® www.ahridirectory.org Globally Recognized. Industry Respected.

Note: For optimum performance, mounting location should be within 2 feet of fixture.

Suggested Specification

Tankless water heater shall be an Eemax model number SPEX_____.

Unit shall have ABS-UL 94 5VA rated cover. Unit shall allow mounting in any orientation. Element shall be replaceable cartridge insert. Element shall be iron-free, nickel-chrome material. Unit shall have replaceable filter in the inlet connector. Unit shall include an integrated flow meter to ensure accurate turn-on / turn-off flow rate. Heater shall be fitted with 3/8" compression fittings to eliminate the need for soldering. Maximum operating pressure of 150 PSI. Diagnostic features to include LED error/fault indicator. Heater shall employ technology that engages upon start-up to avoid dry-fire occurrence. Hot water storage tanks prohibited. Unit shall be Eemax or approved equal.

NOTE: Refer to rating chart for product information.

Specification options to be included with SPEX models:

_____ **N4**	NEMA 4 steel cabinet with powder coat finish
_____ **N4X**	NEMA 4 stainless steel, corrosion-resistant cabinet
EX68031-15	Disconnect Switch (see page 38-41)

NOTE: Unit should not be used in a recirculation application. Contact an EEMAX representative for alternative recommendations.

NOTE: Not recommended for use in meeting public handwashing UPC 407.3 and IPC 416.5 requirements. FlowCo is not compatible with thermostatic mixing valves. Please see AccuMix pages 36 and 37.

Information and product specifications contained in this document are subject to change without notice. REV 2026

FlowCo™

Non-Thermostatic Heater for Non-Public Handwashing And Other Fixed-Flow Applications

		kW	TOTAL AMP DRAW	CIRCUITS REQUIRED X BREAKER SIZE	RECOMMENDED WIRE SIZE (75° C/CU)	TURN ON (GPM)	TEMPERATURE RISE °F 0.3 GPM	0.5 GPM	.75 GPM	1.0 GPM	1.5 GPM	2.0 GPM
	VOLTS 120											
	SPEX1812	1.8	15	(1x15)	14 AWG	0.2	41°	25°	16°	12°	8°	6°
C	**SPEX1812CA** (Canadian model)	1.8	15	(1x15)	14 AWG	0.2	41°	25°	16°	12°	8°	6°
	SPEX2412	2.4	20	(1x20)	12 AWG	0.25	55°	33°	22°	16°	11°	8°
C	**SPEX2412CA** (Canadian model)	2.4	20	(1x20)	12 AWG	0.25	55°	33°	22°	16°	11°	8°
	SPEX3012	3.0	25	(1x25)	12 AWG	0.25	68°	41°	27°	20°	14°	10°
C	**SPEX3012CA** (Canadian model)	3.0	25	(1x25)	12 AWG	0.25	68°	41°	27°	20°	14°	10°
	SPEX3512	3.5	30	(1x30)	10 AWG	0.3	80°	48°	32°	24°	16°	12°
C	**SPEX3512CA** (Canadian model)	3.5	30	(1x30)	10 AWG	0.3	80°	48°	32°	24°	16°	12°
	VOLTS 208 Single Phase											
	SPEX3208	3.0	15	(1x15)	14 AWG	0.25	68°	41°	27°	20°	14°	10°
C	**SPEX3208CA** (Canadian model)	3.0	15	(1x15)	14 AWG	0.25	68°	41°	27°	20°	14°	10°
	SPEX4208	4.1	20	(1x20)	12 AWG	0.4	–	56°	37°	28°	19°	14°
C	**SPEX4208CA** (Canadian model)	4.1	20	(1x20)	12 AWG	0.4	–	56°	37°	28°	19°	14°
	SPEX8208	8.3	40	(1x40)	8 AWG	0.7	–	–	76°	57°	38°	28°
C	**SPEX8208CA** (Canadian model)	8.3	40	(1x40)	8 AWG	0.7	–	–	76°	57°	38°	28°
	VOLTS 240* Single Phase											
	SPEX35	3.5	15	(1x15)	14 AWG	0.3	80°	48°	32°	24°	16°	12°
	SPEX35 (derated 208V performance)	2.6	12.6	(1x15)	14 AWG	0.3	51°	36°	24°	18°	12°	9°
C	**SPEX35CA** (Canadian model)	3.5	15	(1x15)	14 AWG	0.3	80°	48°	32°	24°	16°	12°
	SPEX48	4.8	20	(1x20)	12 AWG	0.4	–	66°	44°	33°	22°	16°
	SPEX48 (derated 208V performance)	3.6	17.3	(1x20)	12 AWG	0.4	70°	49°	33°	25°	16°	12°
C	**SPEX48CA** (Canadian model)	4.8	20	(1x20)	12 AWG	0.4	–	66°	44°	33°	22°	16°
	SPEX55	5.5	23	(1x25)	12 AWG	0.5	–	75°	50°	38°	25°	19°
	SPEX55 (derated 208V performance)	4.1	19.8	(1x25)	14 AWG	0.5	80°	56°	37°	28°	19°	14°
C	**SPEX55CA** (Canadian model)	5.5	23	(1x25)	12 AWG	0.5	–	75°	50°	38°	25°	19°
	SPEX65	6.5	27	(1x30)	10 AWG	0.7	–	–	59°	44°	30°	22°
	SPEX65 (derated 208V performance)	4.9	23.4	(1x30)	10 AWG	0.7	95°	66°	44°	33°	22°	17°
C	**SPEX65CA** (Canadian model)	6.5	27	(1x30)	10 AWG	0.7	–	–	59°	44°	30°	22°
	SPEX75	7.5	32	(1x40)	10 AWG	0.7	–	–	68°	51°	34°	26°
	SPEX75 (derated 208V performance)	5.6	27	(1x40)	10 AWG	0.7	†	77°	51°	38°	26°	19°
C	**SPEX75CA** (Canadian model)	7.5	32	(1x40)	10 AWG	0.7	–	–	68°	51°	34°	26°
	SPEX95	9.5	40	(1x40)	8 AWG	0.8	–	–	–	65°	43°	32°
	SPEX95 (derated 208V performance)	6.9	33.0	(1x40)	8 AWG	0.8	†	94°	–	47°	31°	23°
C	**SPEX95CA** (Canadian model)	9.5	40	(1x40)	8 AWG	0.8	–	–	–	65°	43°	32°
	VOLTS 277 Single Phase											
	SPEX3277	3.0	11	(1x15)	14 AWG	0.25	68°	41°	27°	20°	14°	10°
C	**SPEX3277CA** (Canadian model)	3.0	11	(1x15)	14 AWG	0.25	68°	41°	27°	20°	14°	10°
	SPEX4277	4.1	15	(1x15)	14 AWG	0.4	–	56°	37°	28°	19°	14°
C	**SPEX4277CA** (Canadian model)	4.1	15	(1x15)	14 AWG	0.4	–	56°	37°	28°	19°	14°
	SPEX60	6.0	22	(1x25)	12 AWG	0.7	–	–	55°	41°	27°	20°
C	**SPEX60CA** (Canadian model)	6.0	22	(1x25)	12 AWG	0.7	–	–	55°	41°	27°	20°
	SPEX80	8.0	29	(1x30)	10 AWG	0.7	–	–	73°	55°	36°	27°
C	**SPEX80CA** (Canadian model)	8.0	29	(1x30)	10 AWG	0.7	–	–	73°	55°	36°	27°
	SPEX90	9.0	33	(1x35)	10 AWG	0.7	–	–	82°	61°	41°	31°
C	**SPEX90CA** (Canadian model)	9.0	33	(1x35)	10 AWG	0.7	–	–	82°	61°	41°	31°
	SPEX100	10.0	36	(1x40)	8 AWG	0.8	–	–	–	68°	46°	34°
C	**SPEX100CA** (Canadian model)	10.0	36	(1x40)	8 AWG	0.8	–	–	–	68°	46°	34°

NOTE: Unit should not be used in a recirculation application. Contact an EEMAX representative for alternative recommendations.

NOTE: FlowCo non-thermostatic units are NEVER to be used or specified in booster applications or in any application that has a hot water feed.

*240V units can be used on 208V single phase with approximately 25% reduced kilowatt output. Please note per UL standards the rating plate and installation instructions will all be according to a 240V applied voltage. Check with local officials prior to derating the electrical infrastructure.

"C "indicates evaluation and compliance to either Underwriters Laboratories (UL) or Intertek (ETL) under CAN/CSA-C22.2 No. 64/ No. 88.

FlowCo products are NEVER to be used in conjunction with ASSE 1070 mixing valves for public handwashing applications or any application requiring temperature control.

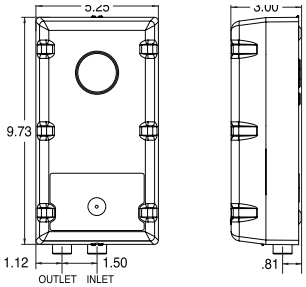

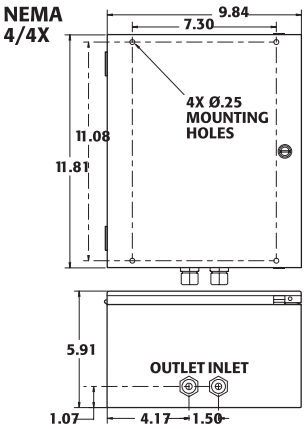

Disconnect Switch Applications

EX68031-15	EX68031-16
SPEX1812, SPEX1812, SPEX2412, SPEX3012, SPEX3512, SPEX3208, SPEX4208, SPEX35, SPEX48, SPEX55, SPEX65, SPEX3277, SPEX4277, SPEX60, SPEX80	SPEX75, SPEX95, SPEX4208, SPEX8208, SPEX90, SPEX100

LavAdvantage™

Thermostatic Heater Ideal for Handwashing and Other Fixed or Variable Flow Applications

Specifications
Tankless Electric Water Heater

Applications

- Handwashing
- Kitchen, bar, utility sinks
- Fixed or variable flow
- Ideal for multiple sensor or metering faucets
- Eyewash (EE models - 90°F max)
- Sanitation (S models - 180°F max)

Features

- Self-diagnostics with intelligent controls actively protect heater installed environment
- SafeStart™ technology engages upon start-up to help avoid dry-fire occurrence
- Industry leading activation with 0.2 GPM turn on flow
- Digital LED display with accessible user interface communicates system status and heater operation feedback
- Silent operation on all models except for SPEX012240T
- Mounts in any orientation for a flexible installation
- Compact size fits almost anywhere; suitable for ADA compliant facilities
- Only one input line, hot or cold, needed for an easy installation
- Designed to deliver hot water to a single pipe faucet, mixing valves or mixing faucets
- Integral 3/8" compression fittings; no soldering or sweat connections required
- No T&P relief valve needed (check local codes)
- Save water and time by installing unit at the point-of-use
- Control system activates heater only on demand
- High temperature limit switch enables safe operation
- Active energy management with power modulation allows for thermostatic accuracy
- 5-year limited warranty on leaks, 1-year on parts

Product Specifications

Dimensions:	10.75" H x 5.25" W x 3" D
Product Weight: (model dependent)	4 lb
Cover:	ABS-UL rated 94 5VA
Color:	White
Adj. Temperature Range:	70°F-140°F*
Min. Operating Pressure:	30 PSI
Max. Operating Pressure:	150 PSI
Element:	Replaceable Nichrome cartridge insert
Fittings:	3/8" compression fittings
UL listed file number:	E86887

U.S. Patent #'s: 4,762,980 and 4,960,976

Special Design Service

Inquiries for units for unique applications are welcome.
Call our Technical Service department at **1 800 543 6163.**
*Special settings available, see specification options

NOTE: Unit should not be used in a recirculation application.
Contact an EEMAX representative for alternative recommendations.

Mount in any Orientation

SafeStart™ Technology

C UL US LISTED

C SP US LOW LEAD CONTENT

NO LEAD*
*The wetted surface of this product contacted by water contains less than 0.25% lead and meets NSF/ANSI 372

bimobject Find our products on bimobject.com BIM

AHRI CERTIFIED® www.ahridirectory.org
Globally Recognized. Industry Respected.

Note: For optimum performance, mounting location should be located within 2 feet of fixture.

Suggested Specification

Tankless water heater shall be an Eemax LavAdvantage model number SPEX_____.

Unit shall have ABS-UL 94 5VA rated cover. Unit shall have 0.2 GPM turn on. Unit shall allow mounting in any direction. Element shall be replaceable cartridge insert. Unit shall have replaceable filter in the inlet connector. Element shall be iron free, Nickel Chrome material. Tankless water heater to utilize complex algorithm, actively managing power application to real time system demand. Integrated flow meter, along with inlet and outlet temperature sensors provide data which allows the unit to instantly adapt to variations in input parameters. Heater shall be fitted with 3/8" compression fittings to eliminate need for soldering. Maximum operating pressure of 150 PSI. Accessible diagnostic features to include error/fault display. Hot water storage tanks prohibited. Unit shall be Eemax or approved equal.

Tankless water heater user interface must have the following capabilities:

- Field serviceable elements
- Selectable display including Celsius /Fahrenheit, setpoint, flow rate, inlet temperature outlet temperature, power factor
- Capable of displaying flow rate in gallons per minute & liters per minute
- Diagnostic features to include error/fault display
- Control board must maintain error/fault history of 5 events

Specification options to be included with SPEX models:

_____ **EE**	Emergency Eyewash. Meets ANSI tepid water
_____ **ML**	Multiple Lavatory. Factory set to 110°F. Max temp. 110°F
_____ **S**	Sanitation. Factory set to 120°F. Max temp. 180°F
_____ **N4**	NEMA 4 steel cabinet with powder coat finish
_____ **N4X**	NEMA 4 stainless steel, corrosion-resistant cabinet
EX68031-15	Disconnect Switch (see page 38-41)

Information and product specifications contained in this document are subject to change without notice. REV 2026

LavAdvantage™

Thermostatic Heater Ideal for Handwashing and Other Fixed or Variable Flow Applications

Specifications
Tankless Electric Water Heater

MODEL NUMBER	kW	TOTAL AMP DRAW	CIRCUITS REQUIRED X BREAKER SIZE	RECOM'D WIRE SIZE (75° C/CU)	TURN ON (GPM)	TEMPERATURE RISE °F 0.35 GPM	0.5 GPM	1.0 GPM	2.0 GPM
VOLTS 120									
SPEX1812T	1.8	15	(1x15)	14 AWG	0.2	35°	25°	12°	6°
SPEX1812T EE	1.8	15	(1x15)	14 AWG	0.2	**	25°	12°	6°
SPEX1812T S	1.8	15	(1x15)	14 AWG	0.2	35°	25°	12°	6°
SPEX2412T	2.4	20	(1x20)	12 AWG	0.2	47°	33°	16°	8°
SPEX2412T EE	2.4	20	(1x20)	12 AWG	0.2	**	33°	16°	8°
SPEX2412T S	2.4	20	(1x20)	12 AWG	0.2	47°	33°	16°	8°
SPEX3012T	3.0	25	(1x25)	12 AWG	0.2	59°	41°	20°	10°
SPEX3012T EE	3.0	25	(1x25)	12 AWG	0.2	**	41°	20°	10°
SPEX3012T S	3.0	25	(1x25)	12 AWG	0.2	59°	41°	20°	10°
SPEX3512T	3.5	30	(1x30)	10 AWG	0.2	68°	48°	24°	12°
SPEX3512T EE	3.5	30	(1x30)	10 AWG	0.2	**	48°	24°	12°
SPEX3512T ML	3.5	30	(1x30)	10 AWG	0.2	68°	48°	24°	12°
SPEX3512T S	3.5	30	(1x30)	10 AWG	0.2	68°	48°	24°	12°
VOLTS 240* Single Phase									
SPEX35T	3.5	15	(1x15)	14 AWG	0.2	68°	48°	24°	12°
SPEX35T (derated 208V perf.)	2.6	12.6	(1x15)	14 AWG	0.2	51°	36°	18°	9°
SPEX35T EE	3.5	15	(1x15)	14 AWG	0.2	**	48°	24°	12°
SPEX35T ML	3.5	15	(1x15)	14 AWG	0.2	68°	48°	24°	12°
SPEX35T S	3.5	15	(1x15)	14 AWG	0.2	68°	48°	24°	12°
SPEX48T	4.8	20	(1x20)	12 AWG	0.2	94°	66°	33°	16°
SPEX48T (derated 208V perf.)	3.6	17.3	(1x20)	12 AWG	0.2	70°	49°	25°	12°
SPEX48T EE	4.8	20	(1x20)	12 AWG	0.2	**	†	33°	16°
SPEX48T ML	4.8	20	(1x20)	12 AWG	0.2	94°	66°	33°	16°
SPEX48T S	4.8	20	(1x20)	12 AWG	0.2	94°	66°	33°	16°
SPEX55T	5.5	23	(1x25)	12 AWG	0.2	107°	75°	38°	19°
SPEX55T (derated 208V perf.)	4.1	19.8	(1x25)	12 AWG	0.2	80°	56°	28°	14°
SPEX55T EE	5.5	23	(1x25)	12 AWG	0.2	**	†	38°	19°
SPEX55T ML	5.5	23	(1x25)	12 AWG	0.2	107°	75°	38°	19°
SPEX55T S	5.5	23	(1x25)	12 AWG	0.2	107°	75°	38°	19°
SPEX65T	6.5	27	(1x30)	10 AWG	0.2	†	89°	44°	22°
SPEX65T (derated 208V perf.)	4.9	23.4	(1x30)	10 AWG	0.2	95°	66°	33°	17°
SPEX65T EE	6.5	27	(1x30)	10 AWG	0.2	**	†	44°	22°
SPEX65T ML	6.5	27	(1x30)	10 AWG	0.2	†	89°	44°	22°
SPEX65T S	6.5	27	(1x30)	10 AWG	0.2	127°	89°	44°	22°
SPEX75T	7.5	32	(1x35)	10 AWG	0.2	†	102°	51°	26°
SPEX75T (derated 208V perf.)	5.6	27	(1x35)	10 AWG	0.2	†	77°	38°	19°
SPEX75T EE	7.5	32	(1x35)	10 AWG	0.2	**	†	51°	26°
SPEX75T ML	7.5	32	(1x35)	10 AWG	0.2	†	102°	51°	26°
SPEX75T S	7.5	32	(1x35)	10 AWG	0.2	146°	102°	51°	26°
SPEX95T	9.5	40	(1x40)	8 AWG	0.2	†	†	65°	32°
SPEX95T (derated 208V perf.)	6.9	33	(1x40)	8 AWG	0.2	†	94°	47°	23°
SPEX95T EE	9.5	40	(1x40)	8 AWG	0.2	**	†	†	32°
SPEX95T ML	9.5	40	(1x40)	8 AWG	0.2	†	†	65°	32°
SPEX95T S	9.5	40	(1x40)	8 AWG	0.2	†	103°	65°	32°
SPEX012240T	11.5	48	(1x50)	8 AWG	0.2	†	†	79°	39°
SPEX012240T (derated 208V perf.)	8.7	41.6	(1x50)	8 AWG	0.2	†	†	59°	30°
SPEX012240T EE	11.5	48	(1x50)	8 AWG	0.2	**	†	†	39°
SPEX012240T ML	11.5	48	(1x50)	8 AWG	0.2	†	†	79°	39°
SPEX012240T S	11.5	48	(1x50)	8 AWG	0.2	†	†	79°	39°

* 240V units can be used on 208V single phase with approximately 25% reduced kilowatt output. Please note per UL standards the rating plate and installation instructions will all be according to a 240V applied voltage. Check with local officials prior to derating the electrical infrastructure.

† Temperature electronically limited to factory preset not to exceed temperature.

" C" indicates evaluation and compliance to either Underwriters Laboratories (UL) or Intertek (ETL) under CAN/CSA-C22.2 No. 64/No. 88.

** Per ANSI Z358.1-2014 minimum flow of an eyewash station is 0.4 GPM @ 30 PSI.

NOTE: Unit should not be used in a recirculation application.
Contact an EEMAX representative for alternative recommendations.

MODEL NUMBER	kW	TOTAL AMP DRAW	CIRCUITS REQUIRED X BREAKER SIZE	RECOM'D WIRE SIZE (75° C/CU)	TURN ON (GPM)	TEMPERATURE RISE °F 0.35 GPM	0.5 GPM	1.0 GPM	2.0 GPM
VOLTS 208 Single Phase									
SPEX3208T	3.0	15	(1x15)	14 AWG	0.2	59°	41°	20°	10°
SPEX3208T ML	3.0	15	(1x15)	14 AWG	0.2	59°	41°	20°	10°
SPEX4208T	4.1	20	(1x20)	12 AWG	0.2	80°	56°	28°	14°
SPEX4208T EE	4.1	20	(1x20)	12AWG	0.2	**	56°	28°	14°
SPEX4208T ML	4.1	20	(1x20)	12 AWG	0.2	80°	56°	28°	14°
SPEX4208T S	4.1	20	(1x20)	12 AWG	0.2	80°	56°	28°	14°
SPEX8208T	8.3	40	(1x40)	8 AWG	0.2	†	†	57°	28°
SPEX8208T EE	8.3	40	(1x40)	8 AWG	0.2	**	†	57°	28°
SPEX8208T ML	8.3	40	(1x40)	8 AWG	0.2	†	†	57°	28°
SPEX8208T S	8.3	40	(1x40)	8 AWG	0.2	†	†	57°	28°
VOLTS 277 Single Phase									
SPEX3277T	3.0	11	(1x15)	14 AWG	0.2	59°	41°	20°	10°
SPEX3277T EE	3.0	11	(1x15)	14 AWG	0.2	59°	41°	20°	10°
SPEX3277T ML	3.0	11	(1x15)	14 AWG	0.2	59°	41°	20°	10°
SPEX3277T S	3.0	11	(1x15)	14 AWG	0.2	59°	41°	20°	10°
SPEX4277T	4.1	15	(1x15)	14 AWG	0.2	80°	56°	28°	14°
SPEX4277T EE	4.1	15	(1x15)	14 AWG	0.2	**	56°	28°	14°
SPEX4277T ML	4.1	15	(1x15)	14 AWG	0.2	80°	56°	28°	14°
SPEX4277T S	4.1	15	(1x15)	14 AWG	0.2	80°	56°	28°	14°
SPEX60T	6.0	22	(1x25)	12 AWG	0.2	†	82°	41°	20°
SPEX60T EE	6.0	22	(1x25)	12 AWG	0.2	**	†	41°	20°
SPEX60T ML	6.0	22	(1x25)	12 AWG	0.2	†	82°	41°	20°
SPEX60T S	6.0	22	(1x25)	12 AWG	0.2	117°	82°	41°	20°
SPEX80T	8.0	29	(1x30)	10 AWG	0.2	†	109°	55°	27°
SPEX80T EE	8.0	29	(1x30)	10 AWG	0.2	**	†	55°	27°
SPEX80T ML	8.0	29	(1x30)	10 AWG	0.2	†	109°	55°	27°
SPEX80T S	8.0	29	(1x30)	10 AWG	0.2	†	109°	55°	27°
SPEX90T	9.0	33	(1x35)	10 AWG	0.2	†	†	61°	31°
SPEX90T EE	9.0	33	(1x35)	10 AWG	0.2	**	†	†	31°
SPEX90T EE	9.0	33	(1x35)	10 AWG	0.2	†	†	61°	31°
SPEX90T S	9.0	33	(1x35)	10 AWG	0.2	†	123°	61°	31°
SPEX100T	10.0	36	(1x40)	8 AWG	0.2	†	†	68°	34°
SPEX100T EE	10.0	36	(1x40)	8 AWG	0.2	**	†	†	34°
SPEX100T ML	10.0	36	(1x40)	8 AWG	0.2	†	†	68°	34°
SPEX100T S	10.0	36	(1x40)	8 AWG	0.2	†	137°	68°	34°

Suffix Definitions

EE	Meets ANSI Z358.1 tepid water requirements. Max. temperature 90°F
ML	Multi lavs 0.2 turn on with 110° temp setting
S	Sanitation not to exceed 180°

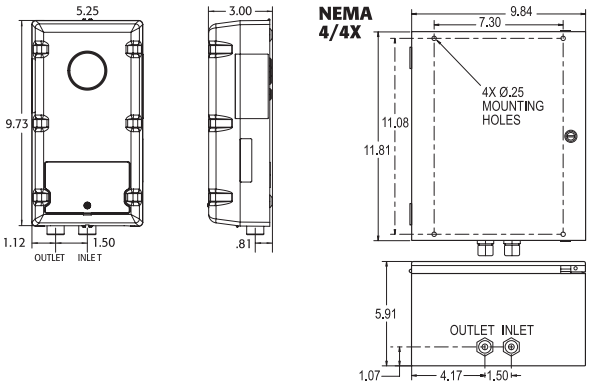

Disconnect Switch Applications

EX68031-15	EX68031-16
SPEX1812T, SPEX2412T, SPEX3012T, SPEX3512T, SPEX3208T, SPEX4208T, SPEX35T, SPEX48T, SPEX55T, SPEX65T, SPEX327T, SPEX4277T, SPEX60T, SPEX80T	SPEX75T, SPEX95T, SPEX012240T, SPEX4208T, SPEX8208T, SPEX90T, SPEX100T

AccuMix II™

Thermostatic Heater Ideal for Sensor or Metering Faucets – UPC 407.3 and IPC 416.5 Compliant

Applications

- Public handwashing
- Lavatory sinks
- Ideal for sensor or metering faucets

Features

- Integrated mixing valve meets ASSE 1070
- Unit meets UPC 407.3 and IPC code 416.5 requirements when properly installed
- Self-diagnostics with intelligent controls actively protect heater in installed environment
- SafeStart™ technology engages upon start-up to help avoid dry-fire occurrence
- Low activation with 0.3 GPM turn on flow
- Digital LED display communicates system status and heater operation feedback
- Silent operation on all models except for AM012240T
- Mounts in any orientation for a flexible installation
- Compact size fits almost anywhere; suitable for ADA compliant facilities
- Only one input line, hot or cold, needed for an easy installation. Inlet water temperature not to exceed 100°F
- Designed to deliver hot water to a single pipe faucet or mixing faucets
- Integral 3/8" compression fittings; no soldering or sweat connections required
- No T&P relief valve needed (check local codes)
- Save water and time by installing unit at the point-of-use
- Control system activates heater only on demand
- High temperature limit switch enables safe operation
- Active energy management with power modulation allows for thermostatic accuracy
- 5-year limited warranty on leaks, 1-year on parts

Product Specifications

Dimensions:	14.5" H x 5.25" W x 4" D
Weight:	5.5 lb
Cover:	ABS-UL 94 5VA
Color:	White
Temperature:	Factory set to 105°F
Min. Operating Pressure:	30 PSI
Max. Operating Pressure:	150 PSI
Element:	Replaceable nichrome cartridge insert
Fittings:	3/8" compression fittings
UL listed file number:	E86887

Special Design Service

Inquiries for units for unique applications are welcome.
Call our Technical Service department at **1 800 543 6163.**

Mount in any Orientation

SafeStart™ Technology

LISTED

LOW LEAD CONTENT

bimobject Find our products on bimobject.com BIM

Note: For ICCC compliance, mounting location must be located within 2 feet of fixture. Over 2 feet, contact manufacturer.

Suggested Specification

Tankless water heater shall be an Eemax AccuMix II model number AM_____.

Unit shall have ABS-UL 94 5VA rated cover. Unit shall have 0.3 GPM turn on. Unit shall allow mounting in any direction. Uses ASSE 1070 approved integrated mixing valve to conform to UPC 407.3 and IPC 416.5. Element shall be replaceable cartridge insert. Unit shall have replaceable filter in the inlet connector. Element shall be iron free, Nickel Chrome material. Tankless water heater to utilize complex algorithm, actively managing power application to real time system demand. Integrated flow meter, along with inlet and outlet temperature sensors provide data which allows the unit to instantly adapt to variations in input parameters. Heater shall be fitted with 3/8" compression fittings to eliminate need for solder-ing. Maximum operating pressure of 150 PSI. Diagnostic features to include error/fault display. Hot water storage tanks prohibited. Unit shall be Eemax or approved equal.

Specification options to be included:

_____ **N4**	NEMA 4 steel cabinet with powder coat finish
_____ **N4X**	NEMA 4 stainless steel, corrosion-resistant cabinet
EX68031-15	Disconnect Switch (see page 38-41)

NOTE: Unit should not be used in a recirculation application. Contact an EEMAX representative for alternative recommendations.

Information and product specifications contained in this document are subject to change without notice. REV 2026

AccuMix II™

Specifications
Tankless Electric Water Heater

Ideal for Sensor or Metering Faucets – UPC 407.3 and IPC 416.5 Compliant

Warning: The temperature of this heater has been Eemax factory set at 105°F for handwashing applications and cannot be adjusted. Tampering with any adjustments will void warranty and may cause a loss of compliance to Uniform Plumbing Code 407.3.
For further information please contact our technical support department at **1-800-543-6163.**

NOTE: Unit should not be used in a recirculation application. Contact an EEMAX representative for alternative recommendations.

	MODEL NUMBERS	kW	TOTAL AMP DRAW	CIRCUITS REQUIRED X BREAKER SIZE	RECOMMENDED WIRE SIZE (75° C/CU)	# OF 0.5 AERATORS SUPPLIED/UNIT	TURN ON (GPM)	TEMPERATURE RISE °F 0.3 GPM	0.5 GPM	1.0 GPM	1.5 GPM
	VOLTS 120										
C	**AM004120T**	3.5	30	(1x30)	10 AWG	1	0.3	80°	48°	24°	16°
	VOLTS 240* Single Phase										
C	**AM005240T**	4.8	20	(1x20)	12 AWG	1	0.3	†	66°	33°	22°
	AM005240T (derated 208V perf.)	3.6	17.3	(1x20)	12 AWG	1	0.3	70°	49°	25°	16°
C	**AM007240T**	6.5	27	(1x30)	10 AWG	2	0.3	†	†	44°	30°
	AM007240T (derated 208V perf.)	4.9	23.4	(1x30)	10 AWG	2	0.3	95°	66°	33°	22°
C	**AM010240T**	9.5	40	(1x40)	8 AWG	3	0.3	†	†	65°	43°
	AM010240T (derated 208V perf.)	6.9	33	(1x40)	8 AWG	3	0.3	†	94°	47°	31°
C	**AM012240T**	11.5	48	(1x50)	8 AWG	4	0.3	†	†	79°	52°
	AM012240T (derated 208V perf.)	8.7	41.6	(1x50)	8 AWG	4	0.3	†	†	59°	39°
	VOLTS 277 Single Phase										
	AM004277T	4.1	15	(1x15)	14 AWG	1	0.3	†	56°	28°	19°
	AM008277T	8.0	29	(1x30)	10 AWG	2	0.3	†	†	55°	36°
	AM010277T	10.0	36	(1x40)	8 AWG	3	0.3	†	†	68°	46°

* 240V units can be used on 208V single phase with approximately 25% reduced kilowatt output. Please note per UL standards the rating plate and installation instructions will all be according to a 208V to 240V single phase applied voltage. Check with local officials prior to derating the electrical infrastructure.

† Units are factory preset to 105°F.

"C" indicates evaluation and compliance to either Underwriters Laboratories (UL) or Intertek (ETL) under CAN/CSA-C22.2 No. 64/No. 88.

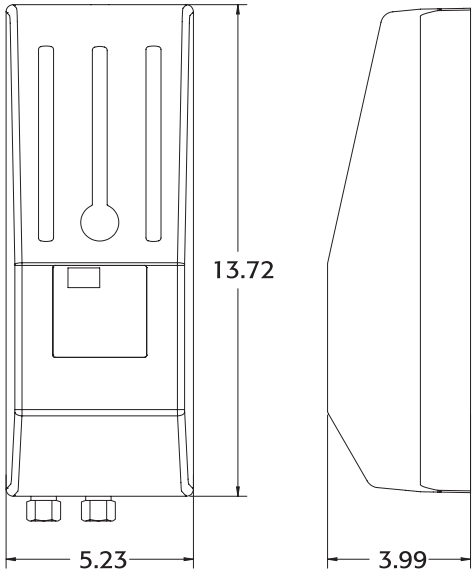

Disconnect Switch Applications

EX68031-15	EX68031-16
AM004120T, AM005240T, AM004277T, AM008277T	AM010240T, AM012240T, AM010277T

De-Ionized

Stainless Steel, Nichrome and Engineered Plastics for All Wetted Components

Applications

- Microchip manufacturing
- Pharmaceutical production
- High tolerance component cleaning
- Ultrasonic cleaning
- Spray rinse tank
- Batch chemical mixing

Features

- Hot or cold water feed
- Capable of heating high purity water with state of the art materials used in construction, rated for purity levels up to 18 MEG OHM
- Proven by independent analytical laboratory to maintain water purity. Test results available upon request
- Compact size allows for easy installation close to the point-of-use
- Thermostatic temperature control available with highly accurate microprocessor to deliver +/–1°F temperature stability
- Single module units mount in any orientation

Product Specifications

Single Module:	9.75" x 5.25" x 3"	4 lb
Dual Module:	10.25" x 10.75" x 4.5"	10 lb
Triple Module:	12.25" x 18.25" x 4.5"	15 lb
Single Module Fittings:	3/8" compression fittings	
Dual/Triple Module Fittings::	1/2" compression fittings at bottom of unit	
Temp Stability:	+/–1° at steady state flow	

Special Design Service

Inquiries for units for unique applications are welcome.
Call our Technical Service department at **1 800 543 6163**.

Suggested Specification

Tankless water heater shall be an Eemax De-Ionized model number _____ DI.

Heating element shall be replaceable element cartridge. Unit shall be capable of heating water up to 18 MEG OHM quality or approved equal.

Enclosure to be fitted with the following features:

Single Module:

_____ **N4** NEMA 4 steel cabinet with powder coat finish

_____ **N4X** NEMA 4 stainless steel, corrosion-resistant cabinet

Double Module:

_____ **N4** NEMA 4 steel cabinet with powder coat finish

_____ **N4X** NEMA 4 stainless steel, corrosion-resistant cabinet

Triple Module:

_____ **N4** NEMA 4 steel cabinet with powder coat finish

_____ **N4X** NEMA 4 stainless steel, corrosion-resistant cabinet

NOTE: Unit should not be used in a recirculation application.
Contact an EEMAX representative for alternative recommendations.

Thermostatic options -EE (Emergency Eyewash), -ML (Multi Lav), and -S (Sanitation) are not available on deionized products.

Single Module

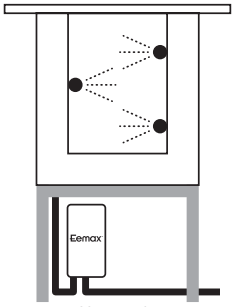

Ultrasonic Cleaning Tank

Dual Module

Triple Module

LISTED

NO LEAD*
*The wetted surface of this product contacted by water contains less than 0.25% lead and meets NSF/ANSI 372

C US
LOW LEAD CONTENT

bimobject
Find our products on bimobject.com
BIM

Electrical configuration and requirements
All Eemax three phase units are custom made to order and as such, are non-returnable and non-refundable. Check your electrical supply, making sure all criteria for operating your Eemax water heater are met.

Eemax 208V
Three Phase Units Delta Configuration
Requires: 3 Lives and 1 Ground (earth)

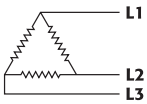

Information and product specifications contained in this document are subject to change without notice. REV 2026

De-Ionized

Stainless Steel, Nichrome and Engineered Plastics for All Wetted Components

Specifications
Tankless Electric Water Heater

Single Module

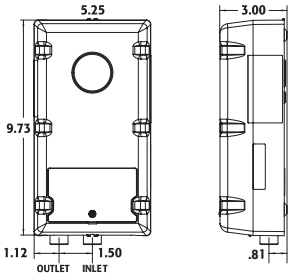

	MODEL NUMBER	kW	TOTAL AMP DRAW	CIRCUITS REQUIRED X BREAKER SIZE	RECOMMENDED WIRE SIZE (CU)	TEMPERATURE RISE °F 0.5 GPM	.75 GPM	1.0 GPM	1.5 GPM	2.0 GPM
	VOLTS 120									
C	**SPEX1812T DI**	1.8	15	(1x15)	14 AWG	25°	16°	12°	8°	6°
C	**SPEX2412T DI**	2.4	20	(1x20)	12 AWG	33°	22°	16°	11°	8°
C	**SPEX3012T DI**	3.0	25	(1x25)	12 AWG	41°	27°	20°	14°	10°
C	**SPEX3512T DI**	3.5	30	(1x30)	10 AWG	48°	32°	24°	16°	12°
	VOLTS 240 Single Phase*									
C	**SPEX35T DI**	3.5	15	(1x15)	14 AWG	48°	32°	24°	16°	12°
C	**SPEX48T DI**	4.8	20	(1x20)	12 AWG	66°	44°	33°	22°	16°
C	**SPEX55T DI**	5.5	23	(1x25)	12 AWG	75°	50°	38°	25°	19°
C	**SPEX65T DI**	6.5	27	(1x30)	10 AWG	89°	59°	44°	30°	22°
C	**SPEX75T DI**	7.5	32	(1x40)	8 AWG	102°	68°	51°	34°	26°
C	**SPEX95T DI**	9.5	40	(1x40)	8 AWG	†	87°	65°	43°	32°
	VOLTS 208 Single Phase									
C	**SPEX8208T DI**	8.3	40	(1x40)	8 AWG	†	76°	57°	38°	28°
	VOLTS 277 Single Phase									
	SPEX3277T DI	3.0	11	(1x15)	14 AWG	41°	27°	20°	14°	10°
	SPEX4277T DI	4.1	15	(1x15)	14 AWG	56°	37°	28°	19°	14°
	SPEX60T DI	6.0	22	(1x30)	10 AWG	82°	55°	41°	27°	20°
	SPEX80T DI	8.0	29	(1x30)	10 AWG	109°	73°	55°	36°	27°
	SPEX90T DI	9.0	33	(1x35)	8 AWG	†	82°	61°	41°	31°
	SPEX100T DI	10.0	36	(1x40)	8 AWG	†	91°	68°	46°	34°

Dual Module Suffix Definitions

TC Staged heating elements
T2 Parallel heating elements

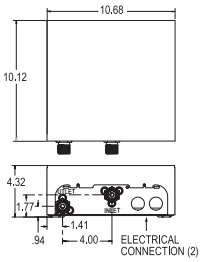

	MODEL NUMBER	kW	TOTAL AMP DRAW	CIRCUITS REQUIRED X BREAKER SIZE	RECOMMENDED WIRE SIZE (CU)	TEMPERATURE RISE °F 1.0 GPM	1.5 GPM	2.0 GPM	3.0 GPM	4.0 GPM T2 ONLY
	VOLTS 240* Single Phase									
C	**EX144T2 DI**	15.0	64	(2x40)	8 AWG	–	65°	51°	34°	26°
C	**EX144TC DI**	15.0	64	(2x40)	8 AWG	†	65°	51°	34°	–
C	**EX190T2 DI**	19.0	80	(2x40)	8 AWG	–	87°	65°	43°	32°
C	**EX190TC DI**	19.0	80	(2x40)	8 AWG	†	87°	65°	43°	–
	VOLTS 208 Single Phase††									
C	**EX1608T2 DI**	16.6	80	(2x40)	8 AWG	–	65°	51°	34°	26°
C	**EX1608TC DI**	16.6	80	(2x40)	8 AWG	†	65°	51°	34°	–
	VOLTS 277 Single Phase									
	EX160T2 DI	16.0	58	(2x30)	10 AWG	–	73°	55°	36°	27°
	EX160TC DI	16.0	58	(2x30)	10 AWG	†	73°	55°	36°	–
	EX200TC DI	20.0	72	(2x40)	8 AWG	†	91°	68°	46°	–

Triple Module Suffix Definitions

T2T Staged heating elements
T3 Parallel heating elements

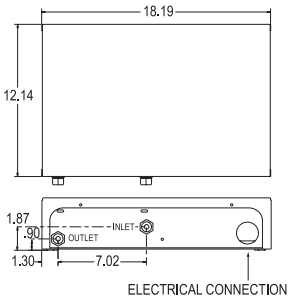

MODEL NUMBER	kW	TOTAL AMP DRAW	CIRCUITS REQUIRED X BREAKER SIZE	RECOMMENDED WIRE SIZE (CU)	TEMPERATURE RISE °F 2.0 GPM	3.0 GPM	4.0 GPM	5.0 GPM T3 ONLY
VOLTS 208 Three Phase Delta††								
EX180T2T DI	18.0	50/phase	1x50	8 AWG	61°	41°	31°	–
EX180T3 DI	18.0	50/phase	1x50	8 AWG	61°	41°	31°	25°
EX240T2T DI	24.0	67/phase	1x70	4 AWG	82°	55°	41°	–
EX240T3 DI	24.0	67/phase	1x70	4 AWG	82°	55°	41°	33°
VOLTS 240* Single Phase								
EX280T2T DI	28.5	119	(3x40)	8 AWG	†	64°	48°	–
VOLTS 480 Three Phase Delta								
ED020480T2T DI	20.0	24/phase	1x30	10 AWG	68°	46°	34°	–
ED024480T2T DI	20.0	29/phase	1x30	10 AWG	82°	55°	41°	–
ED032480T2T DI	32.0	36/phase	1x40	8 AWG	109°	73°	55°	–

NOTE: Unit should not be used in a recirculation application. Contact an EEMAX representative for alternative recommendations.

* 240V units can be used on 208V single phase with 25% reduced temperature output. Please note per UL standards the rating plate and installation instructions will all be according to a 240V applied voltage. Check with local officials prior to derating the electrical infrastructure.

† Temperature electrically limited to factory preset not-to-exceed temperature.

"C" indicates evaluation and compliance to Underwriters Laboratories (UL) under CAN/CSA-C22.2 No. 64/No. 88.

† † ATTENTION: Under no circumstances can De-Ionized be connected to a 240 V three phase load center.

Disconnect Switch

ROTARY, UP TO 30A, 3P, UL508

Eemax Part Number:
EX68031-15

Key Features & Benefits

Enclosed disconnect switches are designed to meet customer's requirements for compact and durable individual disconnecting means.

The enclosed disconnect switch range offers safety, ease of installation, space savings and operational convenience to end-users.

- Suitable for use as heating appliance disconnect
- Meets OSHA lockout/tagout requirements
- NEMA rated enclosures
- Knockouts provided
- Easy screw mounting
- Clear ON/OFF indication

Applications

- Load break switching
- Separate disconnect means within sight of all loads to comply with NEC® Article 430
- Circuit isolation
- Harsh industrial environments

UL / NEMA 4, 4X, 12

Polycarbonate

Approvals & Standards

> UL 508A > UL 508 > UL 98 > CSA

Ratings

Non Fusible:

Volts:	600VAC
Amps:	Up to 30A

Information and product specifications contained in this document are subject to change without notice. REV 2026

Disconnect Switch

ROTARY, UP TO 30A, 3P, UL508

Eemax Part Number:
EX68031-15

Product Specifications (in/mm)

Enclosed Disconnect Switches 30A type NEMA

4X non-metallic

Non-fusible disconnect switch up to 30A

Unit	H	W	D	Weight (lbs)	Rated voltage AC UL
in	5.50	4.21	5.00	1.36	600 V
mm	139	106	127		

Eemax p/n:	EX68031-15
Amperage:	Up to 30A
Recommendation:	Mersen EJM30BS0 enclosed Rotary Disconnect Switch

EJM30BS0

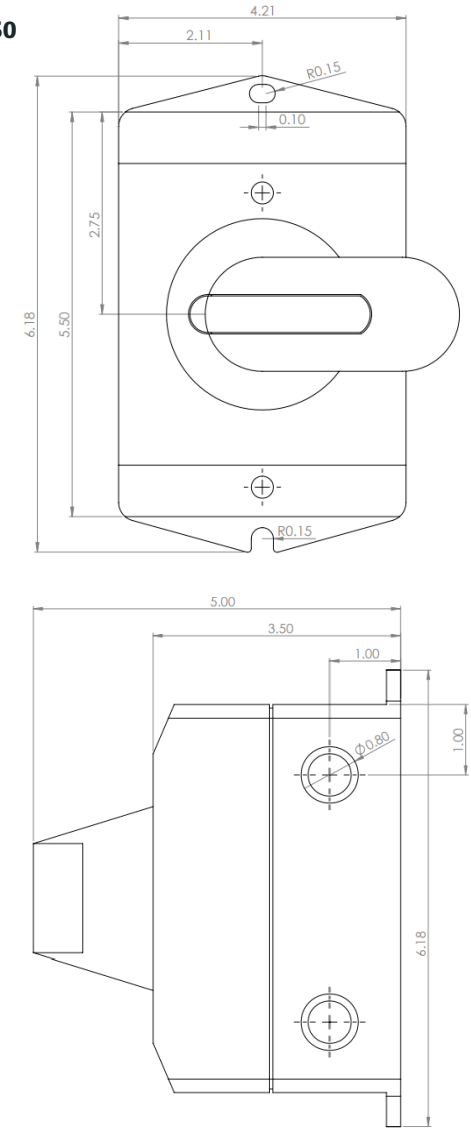

Applicable models

Single Phase Handwashing		
FlowCo	**LavAdvantage**	**AccuMix II**
SPEX1812, SPEX2412, SPEX3012, SPEX3512, SPEX3208, SPEX4208, SPEX35, SPEX48, SPEX55, SPEX65, SPEX3277, SPEX4277, SPEX60, SPEX80	SPEX1812T, SPEX2412T, SPEX3012T, SPEX3512T, SPEX3208T, SPEX4208T, SPEX35T, SPEX48T, SPEX55T, SPEX65T, SPEX3277T, SPEX4277T, SPEX60T, SPEX80T	AM004120T, AM005240T, AM004277T, AM008277T

Disconnect Switch

ROTARY, UP TO 63A, 3P, UL508

Eemax Part Number:
EX68031-16

Key Features & Benefits

Enclosed disconnect switches are used as:

- The NEC required disconnect.
- A non-fusible main disconnect.
- OSHA Lock Out / Tag Out devices to isolate a load for maintenance, service or repair.

A flexible range

- Designed for normal as well as difficult or harsh environnements (wash down, mechanical impacts, corrosion…).
- UL / NEMA rated enclosures up to 1, 3R, 12, 4, 4X.
- Nonmetallic enclosures.
- Compact design.

High switching performance, simple wiring

- Short circuit rating at 600 VAC (kA):65.
- Reliable switching technology.
- Large terminals.

Robust and ergonomic handle

- Red/Yellow handle.
- Clear On - Off positions indication.
- Door interlocking in ON position and padlocked in OFF position.

Suitable for use as:

- OSHA Lockout/Tagout disconnects.
- Safety switches.

UL / NEMA 1, 3, 3R, 12, 4, 4X

Polycarbonate

Ref. 2214 3503

Conformity to standards(1)

> cULus 508A	> UL 60947-4-1* CSA-C22.2 No. 14 Guide NLRV File E173959	> UL 489 CSA-C22.2 No. 5 File E255272	> UL 98 CSA-C22.2 No. 4 Guide WHTY File E201138
> UL 1008 Guide WPYV File E317092	> CSA-C22.2 No. 4 Class 4651-02 File 112964	> CSA-C22.2 No. 5 Class 4652-06 File 112964	> CSA-C22.2 No. 14 Class 3211-05 File 112964

*replaces UL 508

Information and product specifications contained in this document are subject to change without notice. REV 2026

Disconnect Switch

ROTARY, UP TO 63A, 3P, UL508

Eemax Part Number:
EX68031-16

Product Specifications (in/mm)

UL / NEMA enclosure 1, 3, 3R, 12, 4, 4X - polycarbonate
Non-fusible disconnect switch up to 63A

Rating (A)	Unit	H	W	D	G	F	Y	Z	Weight (lbs)
0...60	in	7.8	4.94	3.62	4.45	7.32	4.37	8.27	6.6
	mm	198	125.5	92	113	186	111	210	

Eemax p/n:	EX68031-16
Amperage:	>40A
Recommendation:	SOCOMEC 22243506 enclosure PR SIRCO M2, UL 508, up to 63A 3P Rotary Disc and 4X Encl.

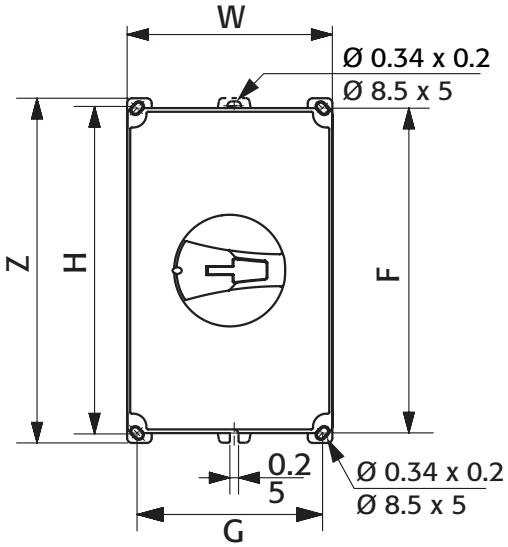

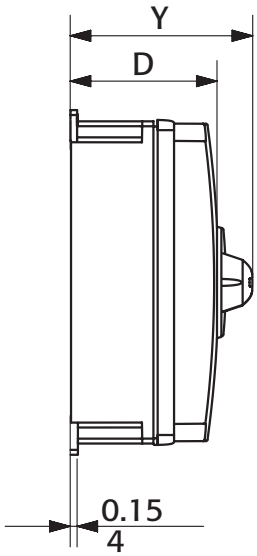

Applicable models

Single Phase Handwashing		
FlowCo	**LavAdvantage**	**AccuMix**
SPEX75, SPEX95, SPEX3012, SPEX4208, SPEX8208, SPEX90, SPEX100	SPEX75T, SPEX95T, SPEX012240T, SPEX4208T, SPEX8208T, SPEX90T, SPEX100T	AM010240T, AM012240T, AM010277T
Single Phase HomeAdvantage II & ProSeries		
HomeAdvantage II	**ProSeries**	
HA008240, HA011240, HA013240, HA018240 (2required), HA024240 (3 required), HA027240 (3 required), HA036240 (4 required)	PR008240, PR011240, PR013240, PR018240 (2 required), PR024240 (3 required), PR027240 (3 required), PR036240 (4 required)	
Three Phase & ProSeries XTP*		
Three Phase	**ProSeries XTP**	
EX180T2T, T3 ED032480T2T, T3	XTP018208, XTP027480, XTP036480, XTP048480	

* Use disconnect switch ONLY when ProSeries XTP is ordered WITHOUT a NEMA 4 cabinet

NOTE: When used on Single Phase units only 2 out of 3 poles will be used.

Accessories and Replacement Parts

Accessories

MODEL NUMBER	DESCRIPTION
EX0061-0.3-AER	0.35 GPM Aerator (Male 15/16"-27, Female 55/64"-27)
EX0061-0.5-AER	0.5 GPM Aerator (Male 15/16"-27, Female 55/64"-27)
EX0061-1.0-AER	1.0 GPM Aerator (Male 15/16"-27, Female 55/64"-27)
EX145	Element Removal Tool – Series 6 and Series 12 only

Eemax Inline Flow Regulator

MODEL NUMBER	DESCRIPTION
IFR 1-2	1.0-2.0 GPM Flow Regulators with 1/2" NPT Fitting. *See page 15 for details*
IFR 3-4	2.0-5.0 GPM Flow Regulators with 3/4" NPT Fitting. *See page 15for details*
EX0061-2.5-IFR	2.5 GPM with Flow Regulator with 3/4" NPT Fitting
EX0062-0.35-IFR	0.35 GPM Inline Flow Regulator with 3/8" Compression Fitting
EX0062-0.5-IFR	0.5 GPM Inline Flow Regulator with 3/8" Compression Fitting

Disconnect Switch

MODEL NUMBER	DESCRIPTION
EX68031-15	Disconnect Switch, Rotory, upto 30A, 3P, UL508, Mersen #EJM30BS0
EX68031-16	Disconnect Switch, Rotory, upto 63A, 3P, UL508, Socomec #22243506

Replacement Parts – Excluding Elements

MODEL NUMBER	DESCRIPTION
CIRCUIT BOARDS	
EX284E-309-240-KIT	208V/240V Thermostatic Circuit Board For EX0309-240V Display Board – legacy HomeAdvantage/ProAdvantage
EX284-309-120V	120V Thermostatic Circuit Board - ProAdvantage
EX0309-240V	Display Board w/Push Button Temperature Control – legacy HomeAdvantage/ProAdvantage
EX284-309-277V	277V Thermostatic Circuit Board - ProAdvantage
EX0183DL-30A	208/240/277V Circuit Board legacy Flow Controlled and legacy Single Point 30 Amp for units under 6.5kW
EX0183DL-40A	208/240/244V Circuit Board legacy Flow Controlled and legacy Single Point for units over 6.5 kW
EX100S-208V-KIT	208/277V Dual Voltage Secondary Board
EX284AB-120-KIT	120V Thermostatic Circuit Board for legacy Series 1 thermostatic units only
EX284AB-120ML-KIT	120V Thermostatic circuit board Multiple Lavatory for legacy Series 1 thermostatic units only
EX284AB-240-KIT	240V Thermostatic Circuit Board for legacy thermostatic units only
EX284AB-240ML-KIT	240V Thermostatic Circuit Board Multiple Lavatory for legacy thermostatic units only
EX284AB-277-KIT	277V Thermostatic Circuit Board for legacy thermostatic units only
EX284AB-277ML-KIT	277V Thermostatic Circuit Board For Multiple Lavatory for legacy thermostatic units only
EX100CV-480V	480V Delta Thermostatic Control Board – Primary
EX100S-480V	480V Delta Thermostatic Control Board – Secondary
EX383	FlowCo Control Board (Must provide unit model number, ex. SPEX1812)
EX384-120	120V LavAdvantage/AccuMix II Control Board (Must provide unit model number, ex. SPEX2412T)
EX384-240	240V LavAdvantage/AccuMix II Control Board (Must provide unit model number, ex. SPEX55T)
EX384-277	277V LavAdvantage/AccuMix II Control Board (Must provide unit model number, ex. SPEX80T)
TRIACS	
EX18-KIT	Triac – Includes triac, backing plate, O-ring, thermoconductive grease, and instructions
ECO	
EX08100-02	ECO – Tepid temperature range – for 480V product only
EX08100-03	ECO – Standard Temperature Range – for 480V product and 'CA' suffix product only
EX08100-04	ECO – Sanitation Temperature Range – for 480V product only
EX278A-KIT	ECO – Standard Temperature Range – Includes ECO, backing plate, O-ring, thermoconductive grease, and instructions
EX278D-KIT	ECO – Sanitation Temperature range – (yellow dot) Sanitize Units Includes ECO, backing plate, O-ring, thermoconductive grease, and instructions
EX278E-KIT	ECO Tepid Temperature range – Emergency Eye Wash, Face wash, Drench Shower. Includes ECO, backing plate, O-ring, thermoconductive grease, and instructions
RELAYS	
EX08002-01	Contactor 480 V 40-amp 3-pole for ED020480T2T, ED020480T3, ED024480T2T, ED024480T3, ED032480T2T, and ED032480T3
EX1050-1	Contactor 240 V 50-amp 2-pole for SPEX012240T, AM012240T, EX012240T, MB012240T, EX023240TC, and EX023240T2
EX250B	Relay 120 V 30-amp 2-pole for SPEX1812, SPEX1812CA, SPEX2412, SPEX2412CA, SPEX3012, SPEX3012CA, SPEX3512, SPEX3512 CA, SP2412, SP3012, SP3512, EX2412, EX3012, and EX3512
EX251B	Relay 277 V 30-amp 2-pole for SPEX3277, SPEX3277CA, SPEX4277, SPEX4277CA, SPEX60, SPEX60 CA, SPEX80, SPEX80CA, SP3277, SP4277, SP60, and SP80
EX253B	Relay 277 V 40-amp 2-pole for SPEX3277T, SPEX4277T, SPEX60T, SPEX80T, SPEX90T, SPEX100T, AM004277T, AM008277T, AM010277T, SPEX90, SPEX90CA, SPEX100, SPEX100CA, EX3277T, EX4277T, EX60T, EX80T, EX90T, EX100T, MT004277T, MT008277T, MT010277T, MB004277T, MB008277T, MB010277T, EX90, EX100, EX160TC, EX160T2, EX200TC, EX200T2, PA008277T, PA010277T, PA016277TC, PA020277TC, SPEX3277T DI, SPEX4277T DI, SPEX60T DI, SPEX80T DI, SPEX90T DI, SPEX100T DI, EX3277T DI, EX4277T DI, EX60T DI, EX80T DI, EX90T DI, EX100T DI, EX160TC DI, EX160T2 DI, EX200T2 DI, and EX200T2 DI
EX254	Relay 240 V 30-amp 2-pole for SPEX35, SPEX35CA, SPEX48, SPEX48CA, SPEX55, SPEX55CA, SPEX65, SPEX65CA, SP35, SP48, SP55, SP65, EX35, EX48, EX55, and EX65
EX254B	Relay 208 V 30-amp 2-pole for SPEX3208, SPEX3208CA, SPEX4208, SPEX4208CA, SP35, SP48, EX35, and EX48
EX255B	Relay 240 V 40-amp 2-pole for SPEX3208T, SPEX35T, SPEX4208T, SPEX55T, SPEX65T, SPEX75T, SPEX8208T, SPEX95T, AM005240T, AM007240T, AM010240T, SPEX75, SPEX75CA, SPEX8208, SPEX8208CA, SPEX95, SPEX95CA , SP75, SP8208, SP95, EX3208, EX3208T, EX35T, EX35T, EX4208T, EX48T, EX55T, EX65T, EX75T, EX8208T, EX95T, EX75, EX8208, EX95, MT005240T, MT007240T, MT010240T, MB005240T, MB007240T, MB010240T, EX1608TC, EX1608TC CNL, EX1608T2, EX144TC, EX144TC CNL, EX144T2, EX144T2 CNL, EX190TC, EX190TC CNL, EX190T2, EX190T2 CNL, EX280T2T, EX280T2T CNL, EX280T3, EX280T3 CNL, EX380T2T2, EX380T4, PA005240T, PA007240T, PA008208T, PA010240T, PA014240TC, PA019240TC, PA028240T2T, SS015240TC, SS019240TC, SS029240T2T, SS038240T2T2, SPEX35T DI, SPEX48T DI, SPEX55T DI, SPEX65T DI, SPEX75T DI, SPEX8208T DI, SPEX95T DI, EX35T DI, EX48T DI, EX55T DI, EX65T DI, EX75T DI, EX8208T DI, EX95T DI, EX1608TC DI, EX1608T2 DI, EX144TC DI, EX144T2 DI, EX190TC DI, EX190T2 DI, EX280T2T DI, and EX280T3 DI
EX256	Relay 208 V 75-amp 3-pole for EX240T2T, EX240T3, EX240T2T, EX240T3, PA024208T2T, PA024208T2T, EX240T2T DI, EX240T3 DI, EX240T2T DI, and EX240T3 DI
EX257B	Relay 277V 50-amp 4-pole for EX240T2T-277, EX240T3-277, EX240T2T-277, EX240T3-277, EX320T2T-277 DI, EX320T2T-277 DI, PA024277T2T, PA024277T2T, PA032277T2T, EX240T2T-277 DI, EX240T3-277 DI, EX240T2T-277 DI, EX240T3-277 DI, EX320T2T-277 DI, and EX320T2T-277 DI
EX259B	Relay 120 V 30-amp 2-pole for SPEX1812T, SPEX2412T, SPEX3012T, SPEX3512T, AM004120T, EX2412T, EX3012T, EX3512T, MT004120T, MB004120T, PA004120T, SPEX1812T DI, SPEX2412T DI, SPEX3012T DI, SPEX3512T DI, EX2412T DI, EX3012T DI, and EX3512T DI

Information and product specifications contained in this document are subject to change without notice. REV 2026

Accessories and Replacement Parts
Continued

Replacement Parts – Heating Elements

MODEL NUMBER	ELEMENT CARTRIDGE
ACCUMIX II MODELS	
AM004120T	EX410
AM005240T	EX1200
AM007240T	EX890
AM010240T	EX630
AM004277T	EX1870
AM008277T	EX960
AM010277T	EX760
AM012240T	EX500 PRT
LAVADVANTAGE AND FLOWCO MODELS	
SPEX1812(T)	EX800 PRT
SPEX2412(T)	EX610
SPEX3012(T)	EX480
SPEX3512(T)	EX410
SPEX3208(T)	EX1440
SPEX4208(T)	EX1050
SPEX8208(T)	EX520
SPEX35(T)	EX1650
SPEX48(T)	EX1200
SPEX55(T)	EX1050
SPEX65(T)	EX890
SPEX75(T)	EX770
SPEX95(T)	EX63o
SPEX012240T	EX500 PRT
SPEX3277(T)	EX260
SPEX4277(T)	EX1870
SPEX60(T)	EX1280
SPEX80(T)	EX960
SPEX90(T)	EX850
SPEX100(T)	EX760
MINITANK MODELS	
EMT1, EMT2.5, EMT4, EMT6	*Contact Eemax Customer Experience for assistance*
SERIES TWO MODELS	
EX120 (T2, TC)	EX1000
EX144 (T2, TC)	EX770
EX190 (T2, TC)	EX630
EX023240 (T2, TC)	EX500 PRT
EX1608 (T2, TC)	EX520
EX160 (T2, TC)	EX960
EX200 (T2, TC)	EX760
PROADVANTAGE MODELS	
PA004120T	EX410
PA008208T	EX520
PA005240T	EX1200
PA007240T	EX890
PA010240T	EX630
PA012240T	EX500 PRT
PA008277T	EX960
PA010277T	EX760
PA014240TC	EX770
PA016277TC	EX960
PA019240TC	EX630
PA020277TC	EX760
PA023240TC	EX500 PRT
PA028240T2T	EX630
PA018208T2T	EX720
PA024208T2T	EX560
PA018277T2T	EX1260
PA024277T2T	EX960
PA032277T2T	EX720

MODEL NUMBER	ELEMENT CARTRIDGE
THREE PHASE MODELS	
EX180(T2T, T3) 277V	EX1280
EX180(T2T, T3) 208V	EX720
EX240(T2T, T3) 277V	EX960
EX240(T2T, T3) 208V	EX560
EX320(T2T, T3) 277V	EX720
ED020480(T2T, T3) 480V	EX3454
ED024480(T2T, T3) 480V	EX2880
ED032480(T2T, T3) 480V	EX2194
ACCUMIX MODELS	
MT004120T, MB004120T	EX410
MT005240T, MB005240T	EX1200
MT007240T, MB007240T	EX890
MT010240T, MB010240T	EX630
MT004277T, MB004277T	EX1870
MT008277T, MB008277T	EX960
MT010277T, MB010277T	EX760
MB012240T	EX500 PRT
SERIES ONE 'SP-' MODELS	
SP2412	EX610
SP3012	EX480
SP3512	EX410
SP3208	EX1440
SP4208	EX1050
SP35	EX1650
SP48	EX1200
SP55	EX1050
SP65	EX890
SP75	EX770
SP95	EX630
SP3277	EX260
SP4277	EX1870
SP60	EX1280
SP80	EX960
SP90	EX850
SP100	EX760
SERIES ONE 'EX-' MODELS	
EX2412(T)	EX610
EX3012(T)	EX480
EX3512(T)	EX410
EX3208(T)	EX1440
EX4208(T)	EX1050
EX8208(T)	EX520
EX35(T)	EX1650
EX48(T)	EX1200
EX55(T)	EX1050
EX65(T)	EX890
EX75(T)	EX770
EX95(T)	EX630
EX012240T	EX500 PRT
EX3277(T)	EX260
EX4277(T)	EX1870
EX60(T)	EX1280
EX80(T)	EX960
EX90(T)	EX850
EX100(T)	EX760
SERIES THREE MODELS	
EX280 (T2T, T3)	EX630
SERIES FOUR MODELS	
EX380 (T2T2, T4)	EX630

SpecAdvantage and SafeAdvantage Replacement Parts Listed By Model

MODEL NUMBER	MODEL NUMBER SUFFIX	ELEMENT NUMBER ASSEMBLY*	FLOW METER ASSEMBLY (INC BOARD)	PRIMARY DISPLAY BOARD*	TRANSFORMER	FUSES	SSR MANIFOLD ASSEMBLY	ECO ASSEMBLY	OPTICAL BOARD ASSEMBLY
VOLTS 208 Three Phase Delta									
AP032208		EX77000-8.12B02	EX78000-00	EX08300-00	EX08303-13	EX198	†	EX278A-KIT	EX78001-00
AP032208	**EE**	EX77000-8.12A04	EX78000-01	EX08300-00	EX08303-13	EX198	†	EX278E-KIT	EX78001-00
AP032208	**S**	EX77000-8.12B00	EX78000-00	EX08300-00	EX08303-13	EX198	†	EX278D-KIT	EX78001-00
AP036208		EX77000-7.20B02	EX78000-00	EX08300-00	EX08303-13	EX08200-11	†	EX278A-KIT	EX78001-00
AP036208	**EE**	EX77000-7.20A04	EX78000-01	EX08300-00	EX08303-13	EX08200-11	†	EX278E-KIT	EX78001-00
AP036208	**S**	EX77000-7.20B00	EX78000-00	EX08300-00	EX08303-13	EX08200-11	†	EX278D-KIT	EX78001-00
AP041208		EX77000-6.33B02	EX78000-00	EX08300-00	EX08303-13	EX08200-11	†	EX278A-KIT	EX78001-00
AP041208	**EFD**	EX77000-6.33A04	EX78000-01	EX08300-00	EX08303-13	EX08200-11	†	EX278E-KIT	EX78001-00
AP041208	**S**	EX77000-6.33B00	EX78000-00	EX08300-00	EX08303-13	EX08200-11	†	EX278D-KIT	EX78001-00
AP054208		EX77000-4.81B02	EX78000-00	EX08300-00	EX08303-13	EX198	†	EX278A-KIT	EX78001-00
AP054208	**EFD**	EX77000-4.81A04	EX78000-01	EX08300-00	EX08303-13	EX198	†	EX278E-KIT	EX78001-00
AP054208	**S**	EX77000-4.81B00	EX78000-00	EX08300-00	EX08303-13	EX198	†	EX278D-KIT	EX78001-00
AP064208		EX77000-4.06B04	EX78000-01	EX08300-00	EX08303-13	EX08200-11	†	EX278A-KIT	EX78001-00
AP064208	**EFD**	EX77000-4.06A04	EX78000-01	EX08300-00	EX08303-13	EX08200-11	†	EX278E-KIT	EX78001-00
AP064208	**S**	EX77000-4.06B00	EX78000-01	EX08300-00	EX08303-13	EX08200-11	†	EX278D-KIT	EX78001-00
VOLTS 480 Three Phase Delta									
AP036480		EX77000-19.2B02	EX78000-00	EX08300-00	EX08303-05	N/A	†	EX278A-KIT	EX78001-00
AP036480	**EE**	EX77000-19.2A04	EX78000-01	EX08300-00	EX08303-05	N/A	†	EX278E-KIT	EX78001-00
AP036480	**S**	EX77000-19.2B00	EX78000-00	EX08300-00	EX08303-05	N/A	†	EX278D-KIT	EX78001-00
AP039480		EX77000-17.7B02	EX78000-00	EX08300-00	EX08303-05	N/A	†	EX278A-KIT	EX78001-00
AP039480	**EE**	EX77000-17.7A04	EX78000-01	EX08300-00	EX08303-05	N/A	†	EX278E-KIT	EX78001-00
AP039480	**S**	EX77000-17.7B00	EX78000-00	EX08300-00	EX08303-05	N/A	†	EX278D-KIT	EX78001-00
AP048480		EX77000-14.4B02	EX78000-00	EX08300-00	EX08303-05	N/A	†	EX278A-KIT	EX78001-00
AP048480	**EFD**	EX77000-14.4A04	EX78000-01	EX08300-00	EX08303-05	N/A	†	EX278E-KIT	EX78001-00
AP048480	**S**	EX77000-14.4B00	EX78000-00	EX08300-00	EX08303-05	N/A	†	EX278D-KIT	EX78001-00
AP054480		EX77000-12.8B04	EX78000-00	EX08300-00	EX08303-08	EX08100-07	†	EX278A-KIT	EX78001-00
AP054480	**EFD**	EX77000-12.8A04	EX78000-01	EX08300-00	EX08303-08	EX08100-07	†	EX278E-KIT	EX78001-00
AP054480	**S**	EX77000-12.8B00	EX78000-00	EX08300-00	EX08303-08	EX08100-07	†	EX278D-KIT	EX78001-00
AP063480		EX77000-18.2B04	EX78000-01	EX08300-00	EX08303-08	EX198	†	EX278A-KIT	EX78001-00
AP063480	**EFD**	EX77000-18.2A04	EX78000-01	EX08300-00	EX08303-08	EX198	†	EX278E-KIT	EX78001-00
AP063480	**S**	EX77000-18.2B00	EX78000-01	EX08300-00	EX08303-08	EX198	†	EX278D-KIT	EX78001-00
AP072480		EX77000-19.2B04	EX78000-01	EX08300-00	EX08303-08	EX198	†	EX278A-KIT	EX78001-00
AP072480	**EFD**	EX77000-19.2A04	EX78000-01	EX08300-00	EX08303-08	EX198	†	EX278E-KIT	EX78001-00
AP072480	**S**	EX77000-19.2B00	EX78000-01	EX08300-00	EX08303-08	EX198	†	EX278D-KIT	EX78001-00
AP096480		EX77000-14.4B04	EX78000-01	EX08300-00	EX08303-08	EX198	†	EX278A-KIT	EX78001-00
AP096480	**EFD**	EX77000-14.4A04	EX78000-01	EX08300-00	EX08303-08	EX198	†	EX278E-KIT	EX78001-00
AP096480	**S**	EX77000-14.4B00	EX78000-01	EX08300-00	EX08303-08	EX198	†	EX278D-KIT	EX78001-00
AP108480		EX77000-12.8B04	EX78000-01	EX08300-00	EX08303-08	EX198	†	EX278A-KIT	EX78001-00
AP108480	**EFD**	EX77000-12.8A04	EX78000-01	EX08300-00	EX08303-08	EX198	†	EX278E-KIT	EX78001-00
AP108480	**S**	EX77000-12.8B00	EX78000-01	EX08300-00	EX08303-08	EX198	†	EX278D-KIT	EX78001-00
AP126480		EX77000-10.97B04	EX78000-01	EX08300-00	EX08303-08	EX08200-11	†	EX278A-KIT	EX78001-00
AP126480	**EFD**	EX77000-10.97A04	EX78000-01	EX08300-00	EX08303-08	EX08200-11	†	EX278E-KIT	EX78001-00
AP126480	**S**	EX77000-10.97B00	EX78000-01	EX08300-00	EX08303-08	EX08200-11	†	EX278D-KIT	EX78001-00
AP144480		EX77000-9.6B04	EX78000-01	EX08300-00	EX08303-08	EX08200-13	†	EX278A-KIT	EX78001-00
AP144480	**EFD**	EX77000-9.6A04	EX78000-01	EX08300-00	EX08303-08	EX08200-13	†	EX278E-KIT	EX78001-00
AP144480	**S**	EX77000-9.6B00	EX78000-01	EX08300-00	EX08303-08	EX08200-13	†	EX278D-KIT	EX78001-00
VOLTS 600 Three Phase Delta									
AP061600		EX77000-8.85B04	EX78000-01	EX08300-00	EX08303-06	EX08200-08	†	EX278A-KIT	EX78001-00
AP061600	**EFD**	EX77000-8.85A04	EX78000-01	EX08300-00	EX08303-06	EX08200-08	†	EX278E-KIT	EX78001-00
AP061600	**S**	EX77000-8.85B00	EX78000-01	EX08300-00	EX08303-06	EX08200-08	†	EX278D-KIT	EX78001-00
AP071600		EX77000-7.61B04	EX78000-01	EX08300-00	EX08303-06	EX08200-08	†	EX278A-KIT	EX78001-00
AP071600	**EFD**	EX77000-7.61A04	EX78000-01	EX08300-00	EX08303-06	EX08200-08	†	EX278E-KIT	EX78001-00
AP071600	**S**	EX77000-7.61B00	EX78000-01	EX08300-00	EX08303-06	EX08200-08	†	EX278D-KIT	EX78001-00
AP102600		EX77000-24.2B04	EX78000-01	EX08300-00	EX08303-06	EX08200-13	†	EX278A-KIT	EX78001-00
AP102600	**EFD**	EX77000-24.2A04	EX78000-01	EX08300-00	EX08303-06	EX08200-08	†	EX278E-KIT	EX78001-00
AP102600	**S**	EX77000-24.2B00	EX78000-01	EX08300-00	EX08303-06	EX08200-08	†	EX278D-KIT	EX78001-00
AP130600		EX77000-16.4B04	EX78000-01	EX08300-00	EX08303-06	EX08200-13	†	EX278A-KIT	EX78001-00
AP130600	**EFD**	EX77000-16.4A04	EX78000-01	EX08300-00	EX08303-06	EX08200-13	†	EX278E-KIT	EX78001-00
AP130600	**S**	EX77000-16.4B00	EX78000-01	EX08300-00	EX08303-06	EX08200-13	†	EX278D-KIT	EX78001-00
AP150600		EX77000-14.4B04	EX78000-01	EX08300-00	EX08303-06	EX08200-13	†	EX278A-KIT	EX78001-00
AP150600	**EFD**	EX77000-14.4A04	EX78000-01	EX08300-00	EX08303-06	EX08200-13	†	EX278E-KIT	EX78001-00
AP150600	**S**	EX77000-14.4B00	EX78000-01	EX08300-00	EX08303-06	EX08200-13	†	EX278D-KIT	EX78001-00

† For units up to serial number 2635795 use EX78009-00. For units after serial number 2635796 use EX78009-01.

* If ordering elements or primary display boards for a heater you must provide the serial number.

Information and product specifications contained in this document are subject to change without notice. REV 2026

Accessories and Replacement Parts
Continued

HomeAdvantage II, ProSeries, and AutoBooster Replacement Parts

MODEL NUMBER	FOR USE WITH
HEATING ELEMENTS	
HA-P001	Element, Heating for HA011240 and PR001140
HA-P002	Element, Heating for HA013240 and PR001340
HA-P003	Element, Heating for HA008240 and PR000840
HA-P004	Element, Heating for HA024240 and PR002440
HA-P005	Element, Heating for HA018240, HA027240, HA036240, PR018240, PR27240, and PR036240
HA-P074	Element, Heating for HATB007240
TRIACS	
HA-P008	Triac, 1st Heating Element for HA008240/HA011240/HA013240 PR008240, PR011240, and PR013240
HA-P009	Triac, 2nd Heating Element for HA011240/HA013240, PR011240, and PR013240
HA-P010	Triac, 1st Heating Element for HA018240 and PR018240
HA-P011	Triac, 2nd Heating Element for HA018240 and PR018240
HA-P012	Triac, 3rd Heating Element for HA024240/HA027240, PR024240, and PR027240
HA-P053	Triac, 1st Heating Element for HA024240, HA027240, PR024240, and PR027240
HA-P054	Triac, 1st Heating Element for HA036240 and PR036240
HA-P055	Triac, 2nd Heating Element for HA024240, HA027240, PR024240, and PR027240
HA-P056	Triac, 2nd Heating Element for HA036240 and PR036240
HA-P057	Triac, 3rd Heating Element for HA036240 and PR036240
HA-P051	Triac, 4th Heating Element for HA036240
HA-P080	Triac for HATB007240
FLOW SENSORS	
HA-P021	Flow Sensor Assembly (no housing) for HA008240, HA011240, HA013240, PR008240, PR011240, and PR013240
HA-P022	Flow Sensor Assembly for 1st generation (engineered plastic body) HA018240/HA024240/HA027240/HA036240, PR018240, PR024240, PR027240, and PR036240
HA-P136	Flow Sensor and Insert for 2nd Generation (brass body) HA018240, HA024240, HA027240, HA036240, PR018240, PR024240, PR027240, and PR036240
CONTROL BOARDS	
HA-P024-008	Control Board for HA008240 w/Transformer
HA-P024-008-PRO	Control board for PR008240 w/Transformer
HA-P024-011	Control Board for HA011240 w/Transformer
HA-P024-011-PRO	Control board for PR011240 w/Transformer
HA-P024-013	Control Board for HA013240 w/Transformer
HA-P024-013-PRO	Control board for PR013240 w/Transformer
HA-P025	Control Board for HA018240/HA027240/HA036240
HA-P025-PRO	Control board for PR018240, PR027240, and PR036240
HA-P025-024	Control Board for HA024240
HA-P025-024-PRO	Control Board for PR024240
HA-P075	Control board with relay for HATB007240
ECO'S	
HA-P033	ECO for HA008240, HA011240, HA013240, PR008240, PR011240, PR013240, and HATB007240
HA-P148	ECO for HA018240, HA024240, HA027240, and HA036240
HA-P149	ECO for PR018240, PR024240, PR027240, and PR036240
THERMISTORS	
HA-P006	Thermistors – inlet and outlet – for HA008240, HA011240, HA013240, PR008240, PR011240, and PR013240
HA-P046	Thermistors – inlet and outlet – for HA018240, HA024240, HA027240, PR018240, PR024240, and PR027240 with flow meters with plastic covers
HA-P047	Thermistors – inlet and outlet – for HA036240 and PR036240 with flow meters with plastic covers
HA-P081	Thermistors – inlet and outlet – for HATB007240
HA-P134	Thermistors – inlet and outlet - for HA018240, HA024240, HA027240, PR018240, PR024240, and PR027240 with brass body flow meters
HA-P135	Thermistors – inlet and outlet – for HA036240 and PR036240 with brass body flow meters
MISC ITEMS	
HA-P026	Knob for HA008240/HA011240/HA013240, PR008240, PR011240, PR013240, and HATB007240
HA-P027	Knob for HA018240/HA024240/HA027240/HA036240, PR018240, PR024240, PR027240, and PR036240
HA-P028	Fuse .187A fast-acting for HA018240, HA024240, HA027240, HA036240, PR018240, PR024240, PR027240, and PR036240 with external fuseholder
HA-P062	Fuseholder with wires for HA018240, HA024240, HA027240, HA036240, PR018240, PR024240, PR027240, and PR036240 with external fuseholder
HA-P066-KIT	NPT Adapter kit Includes (set of 2): NPT adapters 1/2" compression to 1/2" NPT adaptor, 1/2" compression nut, and 1/2" compression ferrule for HA008240, HA011240, HA013240, PR008240, PR011240, and PR013240
HA-P073	Power supply cable HATB007240 to electric tank
HA-P083	Inlet and outlet fittings. Inlet fitting: 3/4" x 14 FNPT to 1/2" compression; outlet fitting: 3/4" x 14 MNPT to 1/2" compression; (2) 1/2" compression nuts and (2) 1/2" compression ferrules for HATB007240
HA-P092	Fuse 0.2A 250V time-delay for HA018240, HA024240, HA027240, HA036240, PR018240, PR024240, PR027240, and PR036240 with fuse on circuit board

ProSeries XTP Replacement Parts

MODEL NUMBER	FOR USE WITH
FLOW METER	
EX76042-02	Turbine Flow Meter for XTP018240, XTP024208, XTP036208, XTP016480, XTP020480, XTP024480, XTP027480, XTP036480, XTP048480, and XTP054480
HEATING ELEMENTS	
EX05502-00	Element, heating for XTP018208
EX05502-01	Element, heating for XTP024208
EX05502-02	Element, heating for XTP032208
EX05502-03	Element, heating for XTP016480
EX05502-04	Element, heating for XTP020480
EX05502-05	Element, heating for XTP024480
EX05502-06	Element, heating for XTP027480
EX05502-07	Element, heating for XTP036480
HA-P004	Element, heating for XTP048480
HA-P005	Element, heating for XTP054480
CONTACTOR	
EX08100-10	Contactor 208V 75-amp for XTP018208, XTP024208, XTP036208, XTP016480, XTP020480, XTP024480, XTP027480, XTP036480, XTP048480, and XTP054480
SOLID STATE RELAY	
EX08200-12	Solid state relay 50-amp for XTP018240, XTP024208, XTP036208, XTP016480, XTP020480, XTP024480, XTP027480, XTP036480, XTP048480, and XTP054480
THERMISTORS	
EX08200-16	Inlet Thermistor for XTP018240, XTP024208, XTP036208, XTP016480, XTP020480, XTP024480, XTP027480, XTP036480, XTP048480, and XTP054480
EX08200-17	Outlet Thermistor for XTP018240, XTP024208, XTP036208, XTP016480, XTP020480, XTP024480, XTP027480, XTP036480, XTP048480, and XTP054480
TRANSFORMERS	
EX08303-13	Control transformer 208 V for XTP018208, XTP024208, and XTP032208
EX08303-08	Control transformer 480 V for XTP016480, XTP020480, XTP024480, XTP027480, XTP036480, XTP048480, and XTP054480
CIRCUIT BOARD	
EX09100-001	Master Display Board for XTP018240, XTP024208, XTP036208, XTP016480, XTP020480, XTP024480, XTP027480, XTP036480, XTP048480, and XTP054480
ECO	
EX279D-KIT	ECO – Standard Temperature range for ProSeries XTP. Includes ECO, backing plate, O-ring, thermoconductive grease, and instructions for XTP018240, XTP024208, XTP036208, XTP016480, XTP020480, XTP024480, XTP027480, XTP036480, XTP048480, and XTP054480

Information and product specifications contained in this document are subject to change without notice. REV 2026

NEMA Cabinet Options Guide

Cabinet	Suffix	Description
NEMA 4	N4	NEMA 4 enclosures are made of powder-coated steel and are used in many applications where an occasional washdown occurs or where machine tool cutter coolant is used. They also serve in applications where a pressurized stream of water will be used. NEMA 4 enclosures are gasketed and the door is clamped for maximum sealing.
NEMA 4X	N4X	NEMA 4X enclosures are made of 304 stainless steel and are used in harsh environments where corrosive materials and caustic cleaners are used. Applications include food, such as meat/poultry processing facilities, where total washdown with disinfectants occur repeatedly, and petro-chemical facilities, including offshore petroleum sites.
NEMA 4X6	N4X6	NEMA 4X6 enclosures are made of 316 stainless steel. NEMA 4X6 enclosures are used in harsh environments where corrosive materials and caustic cleaners are used. Applications include food, such as meat/poultry processing facilities, where total washdown with disinfectants occur repeatedly, and petro-chemical facilities, including offshore petroleum sites.

Option	Suffix	Description	Who can benefit?
Freeze Protection	FP	The Freeze Protection (FP) option includes a cabinet heater which continually monitors temperature and turns on at 40°F to prevent freezing and the potential of product damage. The FP option does NOT include heat trace material for the incoming and outgoing water lines. This must be provided by the plumbing contractor.	Facilities that may experience freezing conditions.
Electrical Disconnect Switch (Non-Fused)	EDS	The Electrical Disconnect Switch (FDS) option allows the heater to be safely shut down at the heater via a safety lockout.	Facilities requiring a door interlock, OSHA lockout/tag-out capability, or any facility which desires a local disconnect integral to the heater. I.e. industrial locations, schools, laboratories, etc.
Fused Disconnect Switch	FDS	The Fused Disconnect Switch (FDS) option allows the heater to be safely shut down at the heater via a safety lockout with the additional benefit of fuse protection integral to the disconnect.	Facilities with code requirements or other regulations needing fuse protection. I.e. industrial locations, schools, laboratories, etc.
Explosion Proof	EP	The Explosion Proof (EP) option adds Class I Division II protection. Any other classifications, contact EEMAX.	Environments classified as hazardous by Article 500 of the National Electrical Code (NEC). I.e. grain elevators, tank farms, chemical plants, refineries, offshore oil drilling rigs, etc.
Ground Fault Circuit Interrupter	GFCI	The Ground Fault Circuit Interrupter (GFCI) is a True RMS sensing unit which continuously monitors the current flowing into the heater. In the event of an electrical hazard where there is an electrical path to ground in excess of prescribed limits, the GFCI will immediately power down the heater.	This protection can benefit all applications.
Stand Kit	SK	The Stand Kit (SK) option is available for locations that are not able to wall mount the unit, or that require a free standing unit.	Offered for facilities procuring a SafeAdvantage, SpecAdvantage, or ProSeries XTP unit.
Remote Display	RD	The Remote Display (RD) option moves the control panel off of the heater itself and positions the display on the exterior of the NEMA 4 or N4X cabinet, making monitoring or temperature adjustment much easier.	This is offered to SpecAdvantage and SafeAdvantage products when mounted in a NEMA 4, 4X, or 4X6 cabinet.
Siren/Beacon	SB	The Siren/Beacon (SB) option is for safety shower applications and includes a flashing light and siren assembly which is activated when the heater is turned on. This option eliminates the need for a water flow switch option to be attached to the drench shower.	Any facility with strict safety requirements or code compliance regulations.
Dry Contact	DC	The Dry Contact (DC) option allows for remote monitoring of the water heater.	Facilities that have a central monitoring station for all of the equipment.
Emergency Stop	ES	The Emergency Stop (ES) pushbutton allows the heater to be safely shut down via an easily accessible button. When pressed, immediately halts the operation of the heater. NOT RECOMMENDED for SafeAdvantage or any safety/tepid water application.	Facilities with code requirements or other regulations requiring a physical Emergency Stop push button.

Tepid Water Requirement Fact Sheet

The American National Standards Institute ANSI Z358.1 requirement for tepid water is 60°F – 100°F for Emergency Eye/Face and Drench Showers. This requirement is a direct response to reduce employers' liability and increase employee safety. The problem with untempered water is that the minimum recommendation of 15 minutes to flush hazardous chemicals from contaminated parts of the body is often not met because incoming water temperature can be as low as 35° (2°C). This condition can cause hypothermia and at the very least discourage proper flushing of contaminates.

The Eemax collection of Emergency Eye/Face and Drench Shower on demand electric water heaters are specifically engineered to comply with ANSI Z358.1 requirements.

Preventative over temperature measures have been engineered into all ANSI compliant Eemax instantaneous water heaters. Sophisticated microprocessing thermostats are factory set to a safe 60°F – 90°F. Unique staging of elements only allow power required for the flow needed (combo eye/face drench shower).

The powerful drench shower heater has the capacity to deliver 23 GPM with no danger of running out of tepid water.

Legionella bacteria or mycobacteria growth is substantially reduced with instantaneous water heaters as there is no stored tepid water.

When the heater is not operational there is no consumption of energy, making it the most economical way to comply with ANSI Z358.1 code.

Eemax, the market leader in the manufacturing and engineering of electric instantaneous water heaters, can build a heater to fit your requirements.

Contact Eemax Engineering personnel for assistance in selection of the right heater. **800 543 6163** or visit **www.eemax.com.**

ANSI Requirements for Emergency Eye Washes and Shower Equipment

Emergency Shower Requirements

1. Shower heads should be not less than 82 in. nor more than 96 in. in height from the surfaces on which the user stands.
2. The spray pattern should have a minimum diameter of 20 in. at 60 in. above the surface on which the user stands. The center of the spray pattern should be located at least 16 in. from any obstruction.
3. Emergency shower heads should be capable of delivering a minimum of 20 GPM of flushing fluid at 30 PSI for a minimum 15 minute period.
4. The valve should be designed so that the flushing fluid flow remains on without requiring the use of the operator's hands, and it should remain on until intentionally shut off. The valve should go from "off" to "on" in 1 second or less.
5. The pull rod should be located not more than 69 in. above the level on which the user stands.
6. Emergency showers should be in accessible locations that require no more than 10 seconds to reach.
7. Delivered flushing fluid temperature should be tepid.
8. Plumbed emergency showers should be activated weekly to verify proper operation.

Plumbed and Self-Contained Eyewash Unit Requirements

1. Eyewash heads should be not less than 33 in. nor more than 45 in. from the surface on which the user stands and 6 in. minimum from the wall or nearest obstruction.
2. The eyewash unit should provide flushing fluid to both eyes simultaneously, and both nozzles should be protected from airborne contaminants.
3. Plumbed and self-contained eyewash equipment should be capable of delivering flushing fluid to the eyes not less than 0.4 GPM at 30 PSI for 15 minutes.
4. The valve should be designed so that the flow remains on without requiring the use of the operator's hand, and it should remain on until intentionally shut off. The valve should go from "off" to "on" in 1 second or less.
5. Eyewash units should be in accessible locations that require no more than 10 seconds to reach.
6. Delivered flushing fluid temperature should be tepid.
7. Plumbed eyewashes should be activated weekly to verify proper operation.

Personal Eyewash Equipment Requirements

1. Personal eyewash units should have the capacity to deliver immediate flushing to the eyes without being injurious to the user.
2. When addressing washing of the eyes, training should address holding the eyelids open and rolling the eyeballs so flushing fluid will flow on all surfaces of the eye and under the eyelid.
3. Delivered flushing fluid temperature should be tepid.
4. Personal eyewash units should be inspected annually to assure conformance with ANSI Z358.1.

Eye/Face Wash Equipment Requirements

1. Eye/face wash heads should be no less than 33 in. and no more than 45 in. from the level on which the user stands and 6 in. minimum from the wall or nearest obstruction.
2. The eye/face unit should provide flushing fluid to both eyes simultaneously, and both nozzles should be protected from airborne contaminants.
3. Plumbed eye/face wash equipment should be capable of delivering flushing fluid to the eyes not less than 3.0 GPM at 30 PSI for 15 minutes.
4. The valve should be designed so that the flow remains on without requiring the use of the operator's hands, and it should remain on until intentionally shut off. The valve should go from "off" to "on" in 1 second or less.
5. Eye/face wash units should be in accessible locations that require no more than 10 seconds to reach.
6. Delivered flushing fluid temperature should be tepid.
7. Plumbed eye/face washes should be activated weekly to verify proper operation.

Hand-Held Drench Hose Requirements

1. Drench hoses should be capable of delivering a minimum of 3 GPM of flushing fluid at 30 PSI for a minimum 15 minute period.
2. The valve should go from "off" to "on" in 1 second or less.
3. Delivered flushing fluid temperature should be tepid.
4. Plumbed drench hoses should be activated weekly to verify proper operation.

Combination Unit Requirement

1. Shower heads should be not less than 82 in. nor more than 96 in. in height from the surface on which the user stands. Eye or eye/face wash heads should be not less than 33 in. nor more than 45 in. from the surface on which the user stands and 6 in. minimum from the wall or nearest obstruction.
2. The spray pattern of the shower head should have a minimum diameter of 20 in. at 60 in. above the surface on which the user stands. The center of the spray pattern should be located at least 16 in. from any obstruction.
3. Emergency shower heads should be capable of delivering a minimum of 20 GPM of flushing fluid at 30 PSI for a minimum 15 minute period. Eyewash equipment should be capable of delivering a minimum of 0.4 GPM at 30 PSI for a minimum 15 minute period, and eye/face wash equipment should be capable of delivering a minimum of 3 GPM at 30 PSI for a minimum 15 minute period.
4. The pull rod should be located not more than 69 in. above the level on which the user stands.
5. Eye and eye/face wash heads should provide flushing fluid to both eyes simultaneously, and both nozzles should be protected from airborne contaminants.
6. The valves should be designed so that the flow remains on without requiring the use of the operator's hands, and it should remain on until intentionally shut off. The valve should go from "off" to "on" in 1 second or less.
7. Combination units should be capable of operating simultaneously and should be positioned so that components may be used simultaneously by the same user.
8. Combination units should be in accessible locations that require no more than 10 seconds to reach.
9. Delivered flushing fluid temperature should be tepid.
10. Plumbed combination units should be activated weekly to verify proper operation.

Information and product specifications contained in this document are subject to change without notice. REV 2025

Terms and Conditions

Terms of Sale

FOB Shipping Point – Title passes to you once the product is delivered to the carrier. It is your responsibility to inspect each shipment and file a claim with the carrier for any damage or shortages.

Freight Terms

Available Options:

1. Collect – Eemax ships on your freight account #.
2. Prepaid – Eemax arranges shipping and charges you for freight.
3. Free Freight – Eemax pays freight to a single location in the continental US if your order is $2900.00 or more. **(excludes SafeAdvantage and SpecAdvantage products)**

Returns

Eemax will accept the return of unopened product with a 25% restock charge with prior approval. Custom products requiring signoffs are excluded. To initiate a return, please fill out an RMA request form and email to Eemax for approval.
eemax.returns@eemax.com

Payment Terms

Net 30 with approved credit.

Order Cancellation

All canceled product will be subject to a 25% restock fee.

How to Contact Eemax

Technical Support:	**eemax.support@eemax.com**
Orders:	**eemax.orders@eemax.com**
Returns:	**eemax.returns@eemax.com**
Phone:	**800 543 6163**
Web:	**eemax.com**

LIMITED WARRANTY INFORMATION - TANKLESS ELECTRIC WATER HEATERS

Subject to the terms and conditions set forth in this limited warranty, each Tankless Water Heater is warranted to the original owner ("Owner") against (i) mechanical or electrical failure of any component solely due to defects in materials or Manufacturer's workmanship for a period of one year from the date of original purchase and (ii) leaks solely due to defects in materials or Manufacturer's workmanship for the later of (x) five years from the date of original purchase or

(y) the date of Owner's occupancy of a new dwelling in which the Tankless Water Heater is installed. However, if Owner cannot document the original date of purchase with the original sales receipt, then the limited warranty period begins on the date the Tankless Water Heater was manufactured. As Owner's sole and exclusive remedy, Manufacturer shall, at Manufacturer's sole election, either repair or replace the Tankless Water Heater or the defective portion of such product. Manufacturer is not liable for any costs incurred by Owner, including, without limitation, the cost of any labor. Manufacturer's maximum liability is limited to the value of the water heater. This limited warranty shall be governed by the laws of the United States.

THE LIMITED WARRANTY SHALL BE THE EXCLUSIVE WARRANTY MADE BY MANUFACTURER AND IS MADE IN LIEU OF ALL OTHER WARRANTIES, STATUTORY, EXPRESSED OR IMPLIED (WHETHER WRITTEN OR ORAL), INCLUDING, BUT NOT LIMITED TO, WARRANTIES OR MERCHANTABILITIES AND FITNESS FOR A PARTICULAR PURPOSE. MANUFACTURER EXPRESSLY DISCLAIMS THE IMPLIED WARRANTIES OF MERCHANTABILITY AND FITNESS FOR A PARTICULAR PURPOSE, AS WELL AS ALL OTHER EXPRESS OR IMPLIED WARRANTIES NOT EXPRESSLY PROVIDED HEREIN. OWNER'S SOLE AND EXCLUSIVE REMEDY IS PRODUCT REPAIR OR REPLACED, AS PROVIDED IN THIS LIMITED WARRANTY, AND ALL OTHER CLAIMS FOR DAMAGES ARE EXPRESSLY EXCLUDED. THE REMEDIES SET FORTH IN THIS LIMITED WARRANTY ARE THE ONLY REMEDIES AVAILABLE TO OWNER OR ANY PERSON FOR BREACH OF ANY COVENANT, DUTY OR OBLIGATION ON THE PART OF MANUFACTURER. MANUFACTURER IS NOT LIABLE TO OWNER OR ANY THIRD PARTY FOR ANY LOSS, PERSONAL INJURY OR PROPERTY DAMAGE, DIRECTLY OR INDIRECTLY, ARISING FROM THE TANKLESS WATER HEATER. UNDER NO CIRCUMSTANCES IS MANUFACTURER LIABLE TO OWNER OR ANY THIRD PARTY FOR INCIDENTAL, CONSEQUENTIAL, SPECIAL, CONTINGENT, OR PUNITIVE DAMAGES OF ANY DESCRIPTION, WHETHER ANY SUCH CLAIM BE BASED UPON WARRANTY, CONTRACT, NEGLIGENCE, STRICT LIABILITY, OR OTHER TORT, OR OTHERWISE.

Some states do not allow the exclusion or limitation of incidental or consequential damages, so the above limitation or exclusion may not apply to Owner. In such cases, the warranty shall be limited to one year from the original date of purchase or date of manufacture, as provided in this limited warranty, or the shortest period allowed by law. This warranty gives Owner specific legal rights and Owner may also have other rights which may vary from state to state.

EXCLUSIONS OF COVERAGE FROM THIS LIMITED WARRANTY

1) Manufacturer is not liable for any water damage or other damages arising, directly or indirectly, from any defect in the Tankless Water Heater component part(s) or from its use.

2) Manufacturer is not liable under this limited warranty or otherwise if:

   (a) The water heater or any of its component parts have been subject to misuse, abuse, alteration, neglect or accident; or
   (b) The rating plate(s) or serial number(s) are altered or removed; or
   (c) The water heater has not been installed in accordance with the applicable local plumbing and/or building code(s) and/or regulation(s); or
   (d) The water heater has not been installed or maintained in accordance with Manufacturer's printed instructions, or installed with improper orientation, improper fastening, improper use of pipe dope/ plumbers putty or with the use of any non-Manufacturer-approved sealant; or
   (e) The water heater has not been continuously supplied with potable water or the water's inlet temperature is above Manufacturer's recommended maximum temperature; or
   (f) The water heater experiences any water pressure or flow interruptions, normal inlet water pressure is outside of the published specification for the heater; is exposed to any condition that causes the heater to turn on before the air is purged from the heater, also known as a dry fire; or
   (g) The water heater has been exposed to conditions resulting from floods, earthquakes, winds, fire, freezing, lightning, or circumstances beyond the Manufacturer's control; or
   (h) The water heater has been removed from its original installation location; or
   (i) The water heater has been used for other than the intended purpose.

3) Owner, and not Manufacturer or its agent/representative, is liable for and shall pay for all field charges for labor or other expenses incurred in the removal and/or repair of the water heater or any expense incurred by Owner in order to repair the water heater.

Subject to the terms and conditions set forth in this limited warranty, if the Tankless Water Heater fails or leaks because of defects in materials or Manufacturer's workmanship during the applicable warranty period set forth above, Owner should contact Manufacturer for a Returned Merchandise Authorization (RMA). No returns will be accepted by Manufacturer without an RMA number and Manufacturer assumes no responsibility for a water heater returned without an RMA number. Water heaters should be wrapped and packaged securely to avoid shipping damage. All shipments of parts from the Manufacturer to the Owner to replace defective components shall be made via normal ground transportation. If expedited shipment is required, it will be provided at Owner's additional cost.

LIMITED WARRANTY INFORMATION - MINI-TANK ELECTRIC WATER HEATERS

Subject to the terms and conditions set forth in this limited warranty, each Mini-Tank Electric Water Heater is warranted to the original owner ("Owner") against (i) mechanical or electrical failure of any component solely due to defects in materials or Manufacturer's workmanship for a period of two years from the date of original purchase and (ii) leaks solely due to defects in materials or Manufacturer's workmanship for the later of (x) six years from the date of original purchase or (y) the date of Owner's occupancy of a new dwelling in which the Mini-Tank Electric Water Heater is installed. However, if Owner cannot document the original date of purchase with the original sales receipt, and if the date of original purchase is not properly documented, then the Applicable Warranty Periods begin on, and are measured from, the date of manufacture of the water heater plus thirty (30) days. As Owner's sole and exclusive remedy, Manufacturer shall, at Manufacturer's sole election, either repair or replace the Mini-Tank Electric Water Heater or the defective portion of such product. Manufacturer is not liable for any costs incurred by Owner, including, without limitation, the cost of any labor. Manufacturer's maximum liability is limited to the value of the water heater. This limited warranty shall be governed by the laws of the United States.

THIS LIMITED WARRANTY SHALL BE THE EXCLUSIVE WARRANTY MADE BY MANUFACTURER AND IS MADE IN LIEU OF ALL OTHER WARRANTIES, STATUTORY, EXPRESSED OR IMPLIED (WHETHER WRITTEN OR ORAL), INCLUDING, BUT NOT LIMITED TO, WARRANTIES OF MERCHANTABILITY AND FITNESS FOR A PARTICULAR PURPOSE. MANUFACTURER EXPRESSLY DISCLAIMS THE IMPLIED WARRANTIES OF MERCHANTABILITY AND FITNESS FOR A PARTICULAR PURPOSE. OWNER'S SOLE AND EXCLUSIVE REMEDY IS PRODUCT REPAIR OR REPLACED, AS PROVIDED IN THIS LIMITED WARRANTY, AND ALL OTHER CLAIMS FOR DAMAGES ARE EXCLUDED.

THE REMEDIES SET FORTH IN THIS LIMITED WARRANTY ARE THE ONLY REMEDIES AVAILABLE TO OWNER OR ANY PERSON FOR BREACH OF ANY COVENANT, DUTY OR OBLIGATION ON THE PART OF MANUFACTURER. MANUFACTURER IS NOT LIABLE TO OWNER OR ANY THIRD PARTY FOR ANY LOSS, PERSONAL INJURY OR PROPERTY DAMAGE, DIRECTLY OR INDIRECTLY, ARISING FROM THE MINI-TANK ELECTRIC WATER HEATER. UNDER NO CIRCUMSTANCES IS MANUFACTURER LIABLE TO OWNER OR ANY THIRD PARTY FOR INCIDENTAL, CONSEQUENTIAL, SPECIAL, CONTINGENT, OR PUNITIVE DAMAGES OF ANY DESCRIPTION, WHETHER ANY SUCH CLAIM BE BASED UPON WARRANTY, CONTRACT, NEGLIGENCE, STRICT LIABILITY, OR OTHER TORT, OR OTHERWISE.

Some states do not allow the exclusion or limitation of incidental or consequential damages, so the above limitation or exclusion may not apply to owner. In such cases, the warranty shall be limited to one year from the original date of purchase or date of manufacture, as provided in this limited warranty, or the shortest period allowed by law. This warranty gives owner specific legal rights and owner may also have other rights which may vary from state to state.

EXCLUSIONS OF COVERAGE FROM THIS LIMITED WARRANTY

1) Manufacturer is not liable for any water damage or other damages arising, directly or indirectly, from any defect in the Mini-Tank Electric Water Heater component part(s) or from its use.

2) Manufacturer is not liable under this limited warranty or otherwise if:

   (a) The water heater or any of its component parts have been subject to misuse, abuse, alteration, neglect or accident; or
   (b) The water heater has not been installed in accordance with the applicable local plumbing and/or building code(s) and/or regulation(s); or
   (c) The water heater has not been installed or maintained in accordance with Manufacturer's printed instructions, or installed with improper orientation, improper fastening, improper use of pipe dope/ plumbers putty or with the use of any non Manufacturer approved sealant; or
   (d) The water heater has not been continuously supplied with potable water or the water's inlet temperature is above Manufacturer's recommended maximum temperature; or
   (e) The water heater experiences any water pressure or flow interruptions, normal inlet water pressure is outside of the published specification for the heater; is exposed to any condition that causes the heater to turn on before the air is purged from the heater also known as dry fire; or
   (f) The water heater has been exposed to conditions resulting from floods, earthquakes, winds, fire, freezing, lightning, or circumstances beyond the Manufacturer's control; or
   (g) The water heater has been removed from its original installation location; or
   (h) The water heater has been used for other than the intended purpose; or
   (i) Operating the water heater in a corrosive or contaminated atmosphere, including without limitation damages, malfunctions, or failures caused by lime, mineral build-up, or scale; or
   (j) Performance problems caused by improper sizing of the water heater, electric service, voltage, wiring or fusing; or
   (k) Damages, malfunctions or failures caused by operating the water heater with any parts removed or with modified, altered, or unapproved parts installed; or
   (l) Units that have had their rating labels altered, tampered with, or removed. A water heater should not be operated if the rating label is removed; or
   (m) Damages, malfunctions or failures caused by operating the water heater with an empty, or partially empty, tank (also known as "dry firing").

3) Owner, and not Manufacturer or its agent/representative, is liable for and shall pay for all field charges for labor or other expenses incurred in the removal and/or repair of the water heater or any expense incurred by Owner in order to repair the water heater.

Subject to the terms and conditions set forth in this limited warranty, if the Mini-Tank Electric Water Heater fails or leaks because of defects in materials or Manufacturer's workmanship during the applicable warranty period set forth above, Owner should contact Manufacturer for a Returned Merchandise Authorization (RMA). No returns will be accepted by Manufacturer without an RMA number and Manufacturer assumes no responsibility for a water heater returned without an RMA number. Water heaters should be wrapped and packaged securely to avoid shipping damage. All shipments of parts from the Manufacturer to the Owner to replace defective components shall be made via normal ground transportation. If expedited shipment is required, it will be provided at Owner's additional cost.

Notes:

Information and product specifications contained in this document are subject to change without notice. REV 2026

Notes:

c UL US LISTED

Intertek

AHRI CERTIFIED® www.ahridirectory.org Globally Recognized. Industry Respected.

NO LEAD* *The wetted surface of this product contacted by water contains less than 0.25% lead and meets NSF/ANSI 372

c SP® us LOW LEAD CONTENT

NOTE: Certifications vary by product.

Eemax® evolving hot water

800 Interstate Park Drive
Montgomery, Alabama 36109
800.543.6163
eemax.com

© 2026 Rheem Manufacturing Company.
All Rights Reserved. EEM6010 REV 5_ 2026